Translation of original operating instructions

AMS 108i

Optical laser measurement system – Ethernet TCP/IP



The Sensor People

We reserve the right to make technical changes
EN • 2026-09-29 • 24-105915

© 2026
Leuze electronic GmbH + Co. KG
In der Braike 1
73277 Owen / Germany
Phone: +49 7021 573-0
Fax: +49 7021 573-199
www.leuze.com
info@leuze.com

1 About this document 5

2 Safety 6

2.1 Intended use 6
2.2 Foreseeable misuse 6
2.3 Competent persons 7
2.4 Disclaimer 7
2.5 Laser safety notices 8

3 Fast commissioning 10

3.1 Mounting 10
3.2 Connecting voltage supply 10
3.3 Display 10
3.4 Ethernet interface 10
3.5 EtherNet/IP interface 10
3.6 Manual configuration of the IP address 11
3.7 Automatically setting the IP address 11
3.8 Setting the Ethernet host communication 11
3.9 TCP/IP 11

4 Device description 13

4.1 Operating principle 13
4.2 Indicators and operational controls 13
4.2.1 LED status indicators 13
4.2.2 Display 13
4.2.3 Control buttons 14
4.3 Menus 15
4.3.1 Menu structure 15
4.3.2 Parameter menu 18
4.3.3 Language selection menu 23
4.3.4 Diagnosis menu 23
4.3.5 Operation examples 23
4.4 Reflectors 25
4.4.1 Description of the reflective tape 25
4.4.2 Overview of reflective tapes 25
4.4.3 Selecting reflector size 26

5 Mounting 27

5.1 Transport and storage 27
5.2 Mounting the device 27
5.2.1 Mounting with pre-mounted alignment unit (BTA) 28
5.2.2 Mounting with adapter plate (BT) 29
5.2.3 Mounting without accessories 29
5.2.4 Parallel mounting 30
5.2.5 Parallel mounting of and DDLS optical data transmission 32
5.2.6 Mounting with laser beam deflector units 32
5.3 Mounting the reflector 33
5.3.1 Pitch of the reflector 33

6 Electrical connection 36

6.1 PWR – voltage supply / switching input/output 37
6.2 Ethernet TCP/IP 37
6.3 Ethernet TCP/IP / Service 37

7 Starting up the device – Ethernet TCP/IP 38
7.1 General information on Ethernet 38
7.2 Ethernet – star topology 38
7.3 Manual configuration of the IP address 38
7.4 Automatically setting the IP address 39
7.5 Setting the Ethernet host communication 39
7.6 Communication protocol (Leuze binary protocol via TCP/IP) 39
7.7 Request telegram to the AMS 108i 39
7.8 Response telegram from the AMS 108i 40
7.9 TCP user data area 41

8 Starting up the device – webConfig tool 43
8.1 System requirements 43
8.2 Start webConfig tool 43
8.3 Short description of the webConfig tool 44
8.3.1 Switching operating mode 44
8.3.2 Menu overview 45

9 Care, maintenance and disposal 46

10 Diagnostics and troubleshooting 47
10.1 Status messages 47
10.2 LED indicators 47
10.3 Display messages 48

11 Service and support 49

12 Technical data 50
12.1 Optical laser measurement system 50
12.2 Reflective tapes 52
12.2.1 Self-adhesive reflective tape 52
12.2.2 Reflective tape on carrier plate 52
12.2.3 Reflective tape with heating 52
12.3 Dimensioned drawings 53

13 Order guide and accessories 61
13.1 Part number code 61
13.2 AMS 108i type overview 61
13.3 Accessories – Mounting 62
13.4 Accessories – Reflective tapes 62
13.5 Accessories – connection technology 63

14 EC Declaration of Conformity 64

15 Licenses 65

1 About this document

Used symbols and signal words

Tab. 1.1: Warning symbols and signal words

	Symbol indicating dangers to persons
	Symbol indicating dangers from harmful laser radiation
	Symbol indicating possible property damage
NOTE	Signal word for property damage Indicates dangers that may result in property damage if the measures for danger avoidance are not followed.
ATTENTION LASER RADIATION	Signal word for dangers from harmful laser radiation
CAUTION	Signal word for minor injuries Indicates dangers that may result in minor injury if the measures for danger avoidance are not followed.
WARNING	Signal word for serious injury Indicates dangers that may result in severe or fatal injury if the measures for danger avoidance are not followed.

Tab. 1.2: Other symbols

	Symbol for tips Text passages with this symbol provide you with further information.
	Symbol for action steps Text passages with this symbol instruct you to perform actions.
	Symbol for action results Text passages with this symbol describe the result of the preceding action.

2 Safety

This sensor was developed, manufactured and tested in line with the applicable safety standards. It corresponds to the state of the art.

2.1 Intended use

The AMS 100i optical laser measurement system is an absolute measuring optical laser measurement system for distance measurement up to 200 m against a reflector.

Areas of application

The AMS 100i is designed for the following areas of application:

- Positioning of automated, moving plant components
- Travel and lifting axes of stacker cranes
- Repositioning units
- Gantry crane bridges and their trolleys
- Elevators
- Electroplating plants

⚠ CAUTION

Observe intended use!

The protection of personnel and the device cannot be guaranteed if the device is operated in a manner not complying with its intended use.

- ↳ Only operate the device in accordance with its intended use.
- ↳ Leuze electronic GmbH + Co. KG is not liable for damages caused by improper use.
- ↳ Read these operating instructions before commissioning the device. Knowledge of the operating instructions is an element of proper use.

⚠ CAUTION

UL applications!

For UL applications, the device must be powered by a PS2 in accordance with EN / IEC / UL 62368-1 or an LPS in accordance with EN / IEC / UL 60950-1 or NEC Class 2.

NOTICE

Comply with conditions and regulations!

- ↳ Observe the locally applicable legal regulations and the rules of the employer's liability insurance association.

2.2 Foreseeable misuse

Any use other than that defined under "Intended use" or which goes beyond that use is considered improper use.

In particular, use of the device is not permitted in the following cases:

- in rooms with explosive atmospheres
- in circuits which are relevant to safety
- for medical purposes

	NOTICE
	**Do not modify or otherwise interfere with the device!** ↳ Do not carry out modifications or otherwise interfere with the device. The device must not be tampered with and must not be changed in any way. ↳ The device must not be opened. There are no user-serviceable parts inside. Opening the device voids the warranty. Warranted features cannot be guaranteed after the device has been opened. ↳ Repairs must only be performed by Leuze electronic GmbH + Co. KG.

2.3 Competent persons

Connection, mounting, commissioning and adjustment of the device must only be carried out by competent persons.

Prerequisites for competent persons:

- They have a suitable technical education.
- They are familiar with the rules and regulations for occupational safety and safety at work.
- They are familiar with the operating instructions for the device.
- They have been instructed by the responsible person on the mounting and operation of the device.

Certified electricians

Electrical work must be carried out by a certified electrician.

Due to their technical training, knowledge and experience as well as their familiarity with relevant standards and regulations, certified electricians are able to perform work on electrical systems and independently detect possible dangers.

In Germany, certified electricians must fulfill the requirements of accident-prevention regulations DGUV (German Social Accident Insurance) provision 3 (e.g. electrician foreman). In other countries, there are respective regulations that must be observed.

2.4 Disclaimer

Leuze electronic GmbH + Co. KG is not liable in the following cases:

- The device is not being used properly.
- Reasonably foreseeable misuse is not taken into account.
- Mounting and electrical connection are not properly performed.
- Changes (e.g., constructional) are made to the device.

2.5 Laser safety notices

ATTENTION



LASER RADIATION – CLASS 2 LASER PRODUCT

Do not stare into beam!

The device satisfies the requirements of IEC/EN 60825-1:2014 safety regulations for a product of **laser class 2** and complies with 21 CFR 1040.10 except for conformance with IEC 60825-1 Ed. 3., as described in Laser Notice No. 56, dated May 8, 2019.

- Never look directly into the laser beam or in the direction of reflected laser beams!
  If you look into the beam path over a longer time period, there is a risk of injury to the retina.
- Do not point the laser beam of the device at persons!
- Interrupt the laser beam using a non-transparent, non-reflective object if the laser beam is accidentally directed towards a person.
- When mounting and aligning the device, avoid reflections of the laser beam off reflective surfaces!
- CAUTION! Use of controls or adjustments or performance of procedures other than specified herein may result in hazardous light exposure.
- Observe the applicable statutory and local laser protection regulations.
- The device must not be tampered with and must not be changed in any way.
  There are no user-serviceable parts inside the device.
  Repairs must only be performed by Leuze electronic GmbH + Co. KG.

NOTICE



Affix laser information and warning signs!

Laser information and warning signs attached to the device. Also included with the device are self-adhesive laser warning and laser information signs (stick-on labels) in multiple languages.

- Affix the laser information sheet to the device in the language appropriate for the place of use.
  When using the device in the US, use the stick-on label with the "Complies with 21 CFR 1040.10" notice.
- Affix the laser information and warning signs near the device if no signs are attached to the device (e.g. because the device is too small) or if the attached laser information and warning signs are concealed due to the installation position.
  Affix the laser information and warning signs so that they are legible without exposing the reader to the laser radiation of the device or other optical radiation.

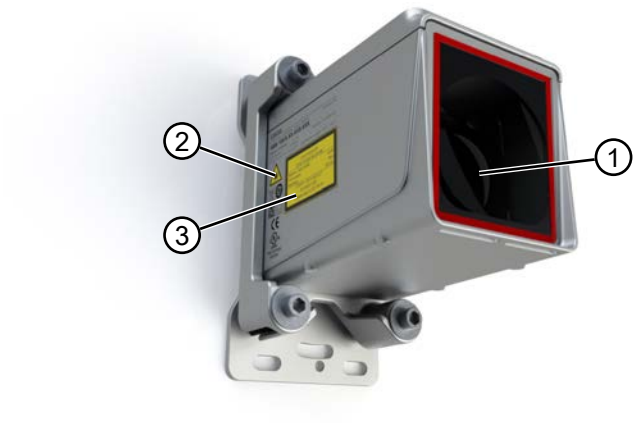

1 Laser aperture
2 Laser warning sign
3 Laser information sign with laser parameters

Fig. 2.1: Laser aperture, laser warning signs



Fig. 2.2: Laser warning and information signs – supplied stick-on labels

3 Fast commissioning

Below you will find a short description for the initial commissioning of the AMS 100i. Detailed explanations for all listed points can be found throughout these operating instructions.

3.1 Mounting

Depending on the purchased model, the AMS 100i can be mounted in various ways (see chapter 13 "Order guide and accessories"):

- with pre-mounted alignment unit (BTA)
- with adapter plate (BT)
- with the threaded holes in the housing (without accessories)

The AMS 100i and the corresponding reflector are mounted on two mutually opposing, plane-parallel, flat walls or system parts. For error-free position measurement, there must be an unobstructed line-of-sight between the AMS 100i and the reflector.

Mounting the device

Mounting with pre-mounted alignment unit (BTA):

- Secure the alignment unit together with mounted laser using four M5 screws.
- Align the laser using the two adjustment screws on the alignment unit. Adjust so that the laser light spot is positioned at the center of the reflector.

If the sensor was purchased without pre-mounted alignment unit (BTA),

- first mount either the adapter plate (BT) or one of the accessory parts to the sensor or
- secure the sensor directly using the threaded holes provided in the housing.

For further information, see chapter 5.2 "Mounting the device".

Mounting the reflector

- Secure the reflector with four M5 screws.
- Tilt the reflector by approx. 1° using the enclosed spacer sleeves.

For further information, see chapter 5.3 "Mounting the reflector".

3.2 Connecting voltage supply

- Connect the AMS100i via the M12 connection XD1 PWR.

For further information, see chapter 6 "Electrical connection".

3.3 Display

Once the laser measurement system is supplied with voltage, the device status as well as the measured position values can be read on the display. The display automatically switches to the display of the measurement values.

Navigate using the [DOWN]/[ENTER] buttons to read off and change the data and parameters.

For further information, see chapter 4.2.2 "Display".

3.4 Ethernet interface

	NOTICE
	The AMS 108i can communicate via TCP/IP and UDP. Standard is TCP/IP. In the case of communication via UDP, the *UDP* protocol must be activated via the display under the menu item **Ethernet > Host communication**.

Standalone operation in Ethernet network

During stand-alone operation of the AMS 108i, the host interface of the superior system is connected to HOST/BUS IN. A star topology (Ethernet structure) is thus possible.

3.5 EtherNet/IP interface

For more information on installing the EtherNet/IP interface Starting up – Ethernet/IP interface.

3.6 Manual configuration of the IP address

	NOTICE
	To set the network addresses, parameter enable must be activated.

If your system does not include a DHCP server or if the IP addresses of the devices are to be set permanently, proceed as follows:

- Have the network administrator specify the data for IP address, net mask and gateway address of the AMS 108i.
- Set these values on the AMS 108i.

The menu structure for display entry can be found at the end of the manual. Call up the appropriate menu levels and enter the respective addresses.

3.7 Automatically setting the IP address

If your system includes a DHCP server that is to be used to assign the IP addresses, note the following:

DHCP address assignment is deactivated by default. To activate DHCP address assignment, you must first activate parameter enable.

The menu structure for display entry can be found at the end of the manual. Call up the corresponding menu levels to activate DHCP.

3.8 Setting the Ethernet host communication

The AMS 108i can communicate via TCP/IP and UDP. Standard is TCP/IP. In the case of communication via UDP, the "UDP" protocol must be activated via the display under the menu item "Ethernet" - "Host communication". UDP and TCP/IP can be activated simultaneously and used in parallel.

If you would like to use the TCP/IP protocol, you must also define whether the AMS 108i is to operate as a TCP client or as a TCP server.

- Contact your network administrator to determine which communication protocol is used.

3.9 TCP/IP

	NOTICE
	For orientation in the menu structure during display entry, see chapter 4.3.1 "Menu structure".

In TCP client mode, the AMS 108i actively establishes the connection to the superior host system (PC / PLC as server). The AMS 108i requires from the user the IP address of the server (host system) and the port number on which the server (host system) accepts a connection. In this case, the AMS 108i determines when and with whom a connection is established!

With an AMS 108i as TCP client, also set the following values:

- IP address of the TCP server (normally the PLC/host computer)
- Port number of the TCP server
- Timeout for the wait time for an answer from the server
- Repetition time for renewed communication attempt following a timeout

In TCP server mode, the superior host system (PC / PLC) actively establishes the connection and the connected AMS 108i waits for the connection to be setup. The TCP/IP stack requires information from the user regarding the local port of the AMS 108i port number on which the connection requests of a client application (host system) are to be accepted. If there is a connection request and a connection is established by the superior host system (PC / PLC as client), the AMS 108i (server mode) accepts the connection. Data can then be sent and received.

↳ With an AMS 108i as TCP server, also set the following values:

- Port number for the communication of the AMS 108i with the TCP client.

UDP

The AMS 108i requires from the user the IP address and the port number of the communication partner.

In the same way, the host system (PC / PLC) requires the set IP address of the AMS 108i and the selected port number. By assigning these parameters, a socket is formed via which the data can be sent and received.

↳ Activate the UDP protocol.

↳ Also set the following values:

- IP address of the communication partner.
- Port number of the communication partner.

	NOTICE
	The AMS 108i provides the possibility of automatic address and port adoption.

4 Device description

4.1 Operating principle

The AMS 100i optical laser measurement system calculates distances to fixed as well as moving system parts. The distance to be measured is calculated according to the principle of the propagation time of radiated light. Here, the light emitted by the laser diode is reflected by a reflector onto the receiving element of the laser measurement system. The AMS 100i calculates the distance to the reflector using phase-correlated time-of-flight measurement. The high absolute measurement accuracy of the laser measurement system and the fast response time are designed for position control applications.

4.2 Indicators and operational controls

4.2.1 LED status indicators

PWR LED

Tab. 4.1: PWR indicators

Color	State	Description
	Off	Device OFF, no supply voltage
Green	Flashing	• No measurement value output • Voltage connected • Self test running • Initialization running • Parameter download running • Boot process running
Green	Continuous light	• Device ok • Measurement value output • Self test successfully finished • Device monitoring active
Red	Flashing	• Device OK but warning message (ATT, TMP, LSR) set in display • Light beam interruption • Plausibility error (PLB)
Red	Continuous light	No measurement value output, details see chapter 4.2.2 "Display"
Orange	Continuous light	• Parameter enable active • No data on the host interface

NET LED

Tab. 4.2: NET indicators

Color	State	Description
	Off	No supply voltage (Power)
Green	Continuous light	Ethernet interface is activated
Green	Flashing	Ethernet interface is being initialized
Red	Continuous light	Device starting up

4.2.2 Display

Status and warning messages are shown in the display only if status changes or faults occur at the device.

Example:



Fig. 4.1: Example of status and warning message

Tab. 4.3: Status and warning messages in the display

Display	Type of message	Meaning
1	Input 1 or output 1 active	Function depending on configuration
2	Input 2 or output 2 active	Function depending on configuration
LSR	Laser pre-failure message warning	Laser diode old, device still functional, exchange or have repaired.
TMP	Temperature monitoring warning	Permissible internal device temperature exceeded / not met
PLB	Plausibility error	Implausible measurement value. Possible cause: • Light beam interruption • Measurement range exceeded • Permissible internal device temperature exceeded • Traverse rate > 10 m/s Depending on the configuration, either zero or the last valid measurement value is output at the interfaces.
ATT	Reception signal warning	Laser exit window or reflector soiled or fogged by rain, water vapor or fog. Clean or dry surfaces.
ERR	Internal hardware error	The device must be sent in for inspection.

Position value

The measured position value is displayed in the configured unit of measurement.

+87.000 m	With the metric setting, the measurement value is always displayed in meters to three decimal places.
+87.0 in	With the inch setting, the measurement value is always displayed in inches to one decimal place.

4.2.3 Control buttons

Tab. 4.4: Control buttons

▼	DOWN	Navigate downward/sideways
↵	ENTER	Confirm/enter value, change menu levels

Navigating within the menus

- Use the [DOWN] button to select the menus within a menu level.
- Use the [ENTER] button to activate the selected menu item.

When one of the buttons is actuated, the display illumination is activated for 10 minutes.

Setting values

If a value can be entered, the display will look like the example below:

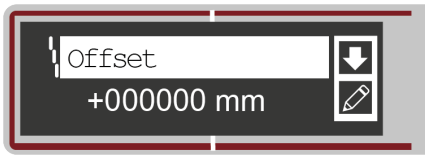

Fig. 4.2: Example of value entry

- Set the desired value using the [DOWN] button. If you have entered an incorrect digit, press the [DOWN] button until the desired digit appears again.
- Save the set value by pressing the [ENTER] button.
- With multi-digit numbers, after entering a digit press the [ENTER] button to move to the next digit on the right.

Selecting options

If an option can be selected, the display will look like the example below:



Fig. 4.3: Example of option selection

- Select the desired option using the [DOWN] button.
- Activate the option by pressing the [ENTER] button.

4.3 Menus

NOTICE	
	Terms may be shown in abbreviated form on the display. To improve readability, the terms are written in full below.

4.3.1 Menu structure

Main menu (Level 1)

- Parameter
- Language selection
- Diagnosis
- Device information

Device information menu

- Product name
- Part no.
- Serial no.
- HW revision
- FW revision

Parameter menu

Tab. 4.5: Parameter menu structure

Level 2	Level 3	Level 4	Level 5	Level 6
Parameter handling	Parameter enable			
	Password	Activate password		
		Password entry		
	Parameters to default			
Ethernet	Ethernet interface			
		Address		
		Gateway		
		Net mask		
		DHCP activated		
	Host communication			
		TCP/IP		
			Activation	
			Mode	
			Keep-alive interval	
			Client	
				IP address
				Port number
				Timeout
				Repetition time
			Server	
				Port number
		UDP		
			Activation	
			IP address	
			Port number	
	Output cycle			
	Position resolution			
	Velocity resolution			

Level 2	Level 3	Level 4	Level 5	Level 6
Position value	Unit			
	Counting direction			
	Offset			
	Preset			
	Error delay			
	Position value in the case of failure			
	Filter type (as of firmware version V2.0.1)	Normal		
		High		
		Low		
		AVG comp		
I/O	I/O 1	Port configuration		
		Switching input	Function	
			Activation	
		Switching output	Function	
			Activation	
	I/O 2	Port configuration		
		Switching input	Function	
			Activation	
		Switching output	Function	
			Activation	
	Limit values	Max. velocity	Activation	
			Max. velocity	
Other	Display dimming			
	Service Ethernet	IP address		
		Port address		
	Heating control	Standard (10°C – 15°C)		
		Extended (30°C – 35°C)		

Language selection menu

(see chapter 4.3.3 "Language selection menu")

Diagnosis menu

(see chapter 4.3.4 "Diagnosis menu")

4.3.2 Parameter menu

Parameter handling

Tab. 4.6: Submenu *Parameter handling*

Level 3	Level 4	Selection/configuration options Description	Standard
Parameter enable		**Lock and enable parameter entry** ON/OFF The standard setting (OFF) prevents unintended parameter changes. With parameter enable activated (ON), the display is inverted. In this state, it is possible to change parameters manually.	OFF
Password	Activate password	**Set up password** ON/OFF To enter a password, parameter enable must be activated. If a password is assigned, changes to the AMS 108i can only be made after the password is entered. The master password 507 overrides the individually set password.	OFF
	Enter password	Setting a 4-digit numerical password. After confirming the password, the entered password will be censored with “000” for privacy reasons.	
Parameters to default		**Reset device to default settings** Pressing the [ENTER] button after selecting the menu item *Parameters to default* resets all parameters to their standard settings without any further security prompts. In this case, English is selected as the display language.	

Ethernet TCP/IP

Level 3	Level 4	Level 5	Level 6	Selection/configuration options Description	Standard
Ethernet interface	Address			The IP address can be set to any value in the format ---.---.---.---. Normally, the network administrator specifies the IP address that is to be set here. If DHCP is activated, the setting made here has no effect and the AMS 108i is set to the values that it obtains from the DHCP server.	192.168.60.101
	Gateway			The gateway address can be set to any value in the format ---.---.---.---. The AMS 108i communicates with participants in other subnets via the gateway.	000.000.000.000
	Net mask			The net mask can be set to any value in the format ---.---.---.---.	255.255.255.0

Level 3	Level 4	Level 5	Level 6	Selection/configuration options Description	Standard
	DHCP activated			ON/OFF If DHCP is activated, the AMS 108i obtains its settings for IP address, gateway and net mask from a DHCP server. The manual settings made above have no effect.	OFF
Host communication	TCP/IP	Activation		ON/OFF TCP/IP communication with the host is activated	ON
		Mode		Server/client The server configures the AMS 108i as a TCP server: The parent host system (PC or PLC as the client) actively establishes the connection, and the connected AMS 108i waits for the connection to be established. Under TCP/IP Server -> Port number, you must also specify the local port on which the AMS 108i receives communication requests from a client application (host system). The client configures the AMS 108i as a TCP client: The AMS 108i actively establishes a connection to the parent host system (PC/PLC as server). Under TCP/IP Client, you must also specify the IP address of the server (host system) and the port number on which the server (host system) accepts a connection. In this case, the AMS 108i determines when and with whom a connection is established.	Server
		Keep-alive interval		In order for the device to determine whether the connection to the host still exists, keep-alive messages, which are answered by the host, can be cyclically transmitted. This parameter defines the time interval [ms] in which the keep-alive messages are transmitted. A value of 0 deactivates the transmission of keep-alive messages.	2000
		Client	IP address	The IP address can be set to any value in the format ---.---.---.---. IP address of the host system with which the AMS 108i exchanges data as TCP client.	0.0.0.0
			Port number	The port number can be set to any value between 0 and 49151. Port number of the host system with which the AMS 108i exchanges data as TCP client.	10000

Level 3	Level 4	Level 5	Level 6	Selection/configuration options Description	Standard
			Timeout	The timeout can be set to any value between 100 and 60,000 ms. Time after which an attempt to establish a connection is automatically interrupted by the AMS 108i if the server (host system) does not respond.	1000
			Repetition time	The repetition time can be set to any value between 100 and 60,000 ms. Time after which another attempt is made to establish a connection.	5000
		Server	Port number	The port number can be set to any value between 0 and 49151. Local port on which the AMS 108i receives connection requests from a client application (host system) as TCP server.	10000
	UDP	Activation		ON/OFF Activates the connection-free UDP protocol, which is suitable for e.g. transferring process data to the host. UDP and TCP/IP can be used in parallel. For network applications with changing partners or for only brief data transmissions, UDP is preferred as the connection-free protocol.	OFF
		IP address		IP address of the host to which data is to be sent. The IP address can be set to any value in the format ---.---.---.---. In the same way, the host system (PC / PLC) requires the set IP address of the AMS 108i and the selected port number. By assigning these parameters, a socket is formed via which the data can be sent and received	0.0.0.0
		Port number		Port number of the host to which data is to be sent. The port number can be set to any value between 0 and 49151.	10001
Output cycle				Value input Data output cycle in multiples of the AMS 108i measurement cycle of 1 ms (1.7 ms for V1.1.2 and earlier). The parameter is only valid if cyclical transmission of the position values is selected. Cyclical transmission is selected via the protocol.	1
Position resolution				0.01 mm / 0.1 mm / 1 mm / 10 mm / free resolution The measurement value can be displayed in these resolutions. The value of the free resolution is determined in the "Position value" submenu in the "Free resolution value" parameter.	0.1 mm

Level 3	Level 4	Level 5	Level 6	Selection/configuration options Description	Standard
Velocity resolution				1 mm/s / 10 mm/s / 100 mm/s	1 mm/s

Position value

Tab. 4.7: Submenu *Position value*

Level 3	Level 4	Selection/configuration options Description	Standard
Unit		Metric/Inch Specifies the units of the measured distances. The set values for preset, offset and velocity value are not automatically converted when the unit is changed. Before changing the unit, check these values and adjust if necessary.	Metric
Counting direction		Positive/Negative Positive: The measurement value begins at 0 and increases with increasing distance. Negative: The measurement value begins at 0 and decreases with increasing distance. Negative distance values may need to be compensated with an offset or preset.	Positive
Offset		Output value = measurement value + offset The resolution of the offset value is independent of the selected "Position resolution" and is entered in mm or inch/100. The offset value is effective immediately after entry. If the preset value is activated, this has priority over the offset. Preset and offset are not offset against each other.	Maximum configurable value: +/- 200,000 mm +/- 800,000 inch/100
Preset		The preset value is accepted by means of teach pulse. The teach pulse can be placed on a hardware input of the M12 PWR connector. The hardware input must be appropriately configured. See also configuration of the I/Os.	Maximum configurable value: +/- 200,000 mm +/- 800,000 inch/100
Error delay		ON/OFF Specifies whether, in the event of an error, the position value immediately outputs the value of the "Position value in the case of failure" parameter or the last valid position value for the configured error delay time.	ON/100 ms
Position value in the case of failure		Last valid value / zero Specifies which position value is output after the error delay time elapses.	Zero

Level 3	Level 4	Selection/configuration options Description	Standard
Filter type (as of firmware version V2.0.1)	Normal High Low AGV comp	Choosing the right filter type can improve measurement accuracy at extreme traverse rates (both positive and negative) and reduce measurement value noise. Normal: suitable for use in all areas High: for very high traverse rates Low: for very low traverse rates AVG comp: Compatibility mode	Normal

I/O

Tab. 4.8: Submenu *I/O settings*

Level 3	Level 4	Level 5	Selection/configuration options Description	Standard
I/O 1	Port configuration		Input/Output Defines whether I/O 1 functions as an output or input.	Output
	Switching input	Function	No function/teach preset/laser ON/OFF	No function
		Activation	Low active/High active	Low active
	Switching output	Function	Velocity / intensity (ATT) / temperature (TMP) / laser (LSR) / plausibility (PLB) / hardware (ERR) In the case of multiple entries, the individual functions are processed in an OR function.	Plausibility (PLB) Hardware (ERR)
		Activation	Low active/High active	Low active
I/O 2	Port configuration		Input/Output Defines whether I/O 2 functions as an output or input.	Output
	Switching input	Function	No function/teach preset/laser ON/OFF	No function
		Activation	Low active/High active	Low active
	Switching output	Function	Velocity / intensity (ATT) / temperature (TMP) / laser (LSR) / plausibility (PLB) / hardware (ERR) In the case of multiple entries, the individual functions are processed in an OR function.	Intensity (ATT) Temperature (TMP) Laser (LSR)
		Activation	Low active/High active	Low active
Limit values	Max. velocity	Activation		
		Max. velocity	max. adjustable value: 15,000 mm/s (60,000 inches/100 s)	

Other

Tab. 4.9: Submenu *Other*

Level 3	Level 4	Selection/configuration options Description	Standard
Display dimming		10 minutes/ON The display illumination is dimmed after 5 minutes and switched off after 10 minutes. If the *OFF* parameter is selected, dimming is permanently deactivated, i.e. the measurement value is always displayed.	10 min
Service Ethernet TCP/IP	Port address	The service interface is available for Leuze-internal purposes only.	7070

4.3.3 Language selection menu

The AMS 100i is delivered from the factory with the display preset to English.

5 display languages are available:

- English
- German
- French
- Italian
- Spanish

To change the language, no password needs to be entered and parameter enable does not need to be activated. The display language is a passive operational control and not a function parameter.

4.3.4 Diagnosis menu

A detailed description of the individual functions can be found in see chapter 10 "Diagnostics and troubleshooting".

4.3.5 Operation examples

Structure of menu items in display

Two menu lines, one on top of the other, are always shown in the display.

Device information				
Status messages				
Parameters	Parameter handling	Parameter enable		
Language selection		Password	Activate password	…
Service		Parameters to default	Password entry	…

Parameter enable

During normal operation parameters can be viewed only. If parameters are to be changed, the *ON* menu item in the **Parameter > Parameter handling > Parameter enable** menu must be activated. To do this, proceed as follows.

Tab. 4.10: Operating example for "parameter enable"

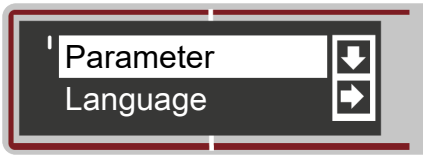	In the main menu, use the [DOWN] button to select the menu item *Parameter*.
	Press the [ENTER] button to enter the *Parameter* menu.

	Press the [DOWN] button to select the menu item *Parameter handling*.
	Press the [ENTER] button to enter the *Parameter handling* menu.
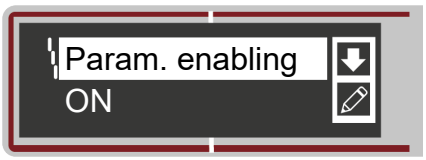	In the *Parameter handling* menu, use the [DOWN] button to select the menu item *Parameter enable*.
	Press the [ENTER] button to enter the *Parameter enable* menu.
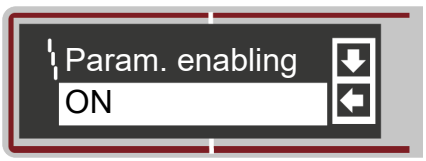	In the *Parameter enable* menu, use the [DOWN] button to select the menu item *ON*.
	Press the [ENTER] button to activate parameter enable.

	NOTICE
	- As long as parameter enable is active, the entire AMS 100i display is inverted. - If a password was stored, parameter enable is not possible until this password is entered; see the example below. - For the SSI interface, communication between the control and the AMS 100i is active even if parameter enable is active. Changes to the SSI parameters via display entry have immediate effect.

Password for parameter enable

Parameter entry on the AMS 100i can be protected with a password.

If a password is assigned, parameter enable must be activated using the password. If parameter enable has been activated after successfully entering the password, parameters can be changed via the display.

Tab. 4.11: Operating example for "password for parameter enable"

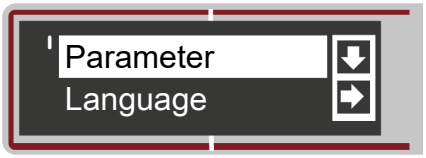	In the main menu, use the [DOWN] button to select the menu item *Parameter*.
	Press the [ENTER] button to enter the *Parameter* menu.
	Press the [DOWN] button to select the menu item *Parameter handling*.
	Press the [ENTER] button to enter the *Parameter handling* menu.
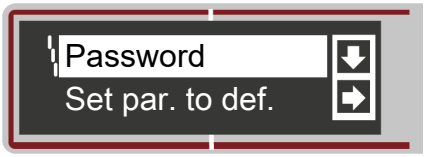	In the *Parameter handling* menu, use the [DOWN] button to select the menu item *Password*.
	Press the [ENTER] button to enter the *Password* menu.
	In the *Password* menu, use the [DOWN] button to select the menu item *Password activation*.
	Press the [ENTER] button to enter the *Password activation* menu.

	In the *Password activation* menu, use the [DOWN] button to select the menu item *OFF*.
	Press the [ENTER] button to set password activation to *ON*.
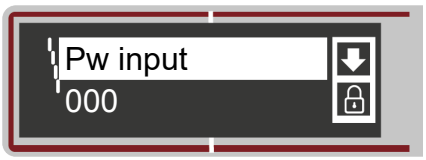	In the *Password* menu, use the [DOWN] button to select the menu item *Password entry*.
	Press the [ENTER] button to enter the *Password entry* menu.
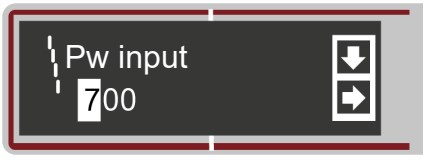	Enter the password (digits), see chapter 4.2.3 "Control buttons".
	Press the [ENTER] button to confirm the value input.
	Exit the menu by pressing the [DOWN] button several times until *Exit menu* appears and then press the [ENTER] button, or wait until the AMS displays the measurement screen again.
	The next time you try to make a selection using the control buttons, you will be prompted to enter the password to allow you to make entries.

	NOTICE
	The AMS 108i can be enabled at any time using the master password 507.

4.4 Reflectors

4.4.1 Description of the reflective tape

The AMS 100i measures distances against a reflective tape specified by Leuze. All technical data given for the AMS 100i, such as the operating range or accuracy, can only be achieved with the reflective tape specified by Leuze.

The reflective tape consists of a white, microprism-based reflective material. The microprisms are protected by a hard, highly transparent protective layer.

Under certain circumstances, the protective layer can cause surface reflections. The surface reflections can be directed past the AMS 100i by positioning the reflective tape at a slight incline. How to mount the reflective tape/reflectors is described in these operating instructions (see chapter 5.3 "Mounting the reflector").

A commercially available household detergent can be used for cleaning. Rinse with clear water and dry the surface. Do not use any abrasive agents.

Store reflective tapes in a cool and dry place.

4.4.2 Overview of reflective tapes

The reflective tapes/reflectors must be ordered separately, see chapter 13.4 "Accessories – Reflective tapes".

- Self-adhesive reflective tape
  - The reflective tape (…x…-**S**) must be bonded to a separate carrier plate (not included in the scope of delivery).
  - Technical data: see chapter 12.2.1 "Self-adhesive reflective tape"
- Reflective tape on carrier plate
  - The reflective tape (…x…-**M**) is affixed to a carrier plate.
  - Technical data: see chapter 12.2.2 "Reflective tape on carrier plate"

- Reflective tape with heating
  - The reflective tape (…x…-**H**) is affixed to a heated, thermally insulated carrier. The insulation results in a very high energetic efficiency. Only the reflective tape is kept at the specified temperature by the integrated heater. The insulation on the back prevents the generated heat from being dissipated via the steel construction. Energy costs are greatly reduced in the case of continuous heating.
  - Technical data: see chapter 12.2.3 "Reflective tape with heating"

4.4.3 Selecting reflector size

Depending on the system dimensions, the reflector can be mounted so that it moves with the vehicle or it can be mounted at a fixed location.

The choice of size is left to the user. In each case, the user must check whether the recommended reflector size is suitable for the respective application.

Tab. 4.12: Recommended reflector size

Device type	Operating range (m)	Recommended reflector size (H x W)	Type of reflective tape …-S (self-adhesive) …-M (carrier plate) …-H (heating)	Part no.
AMS 108i 40	40	200x200 mm	REF 4-A-150x150[1]	50141015
			Reflective tape 200x200-S	50104361
			Reflective tape 200x200-M	50104364
			Reflective tape 200x200-H	50115020
			REF 4-A-300x300[1]	50141014
AMS 108i 120	120	500x500 mm	Reflective tape 500x500-S	50104362
			Reflective tape 500x500-M	50104365
			Reflective tape 500x500-H	50115021
AMS 108i 200	200	749x914 mm	Reflective tape 749x914-S	50104363
		914x914 mm	Reflective tape 914x914-M	50104366
			Reflective tape 914x914-S	50108988
			Reflective tape 914x914-H	50115022

[1] For landside mounting

NOTICE

The recommended reflector sizes apply to on-vehicle mounting of the AMS 100i. For stationary mounting of the AMS 100i, a smaller reflector is generally sufficient for all measurement distances. For this reason, two smaller reflector sizes are available in the self-adhesive model “-S,” see chapter 13.4 "Accessories – Reflective tapes".

During system planning and design, always check whether mechanical travel tolerances require the use of a reflector larger than that which is recommended. This applies, in particular, when the laser measurement system is mounted on a vehicle. During travel, the laser beam must reach the reflector unobstructed. For on-vehicle mounting of the AMS 100i, the reflector size must accommodate any travel tolerances that may arise and the associated "wandering" of the light spot on the reflector.

5 Mounting

5.1 Transport and storage

NOTICE

- Package the device for transport and storage in such a way that is protected against shock and humidity. Optimum protection is achieved when using the original packaging.
- Ensure compliance with the approved environmental conditions listed in the specifications.

Unpacking

- Check the packaging content for any damage. If damage is found, notify the post office or shipping agent as well as the supplier.
- Check the delivery contents using your order and the delivery papers:
  - Delivered quantity
  - Device type and model as indicated on the name plate
  - Package insert

The name plate indicates your device's AMS 100i type, see chapter 13.2 "AMS 108i type overview".



Fig. 5.1: Name plate of AMS 107i

- Save the original packaging for later storage or shipping.
- If you have questions, please contact your supplier or Leuze customer service.
- Observe the applicable local regulations when disposing of the packaging materials.

5.2 Mounting the device

The AMS 100i and the corresponding reflector are mounted on two mutually opposing, plane-parallel, flat walls or system parts. For error-free position measurement, there must be an unobstructed line-of-sight between the AMS 100i and the reflector.

5.2.1 Mounting with pre-mounted alignment unit (BTA)

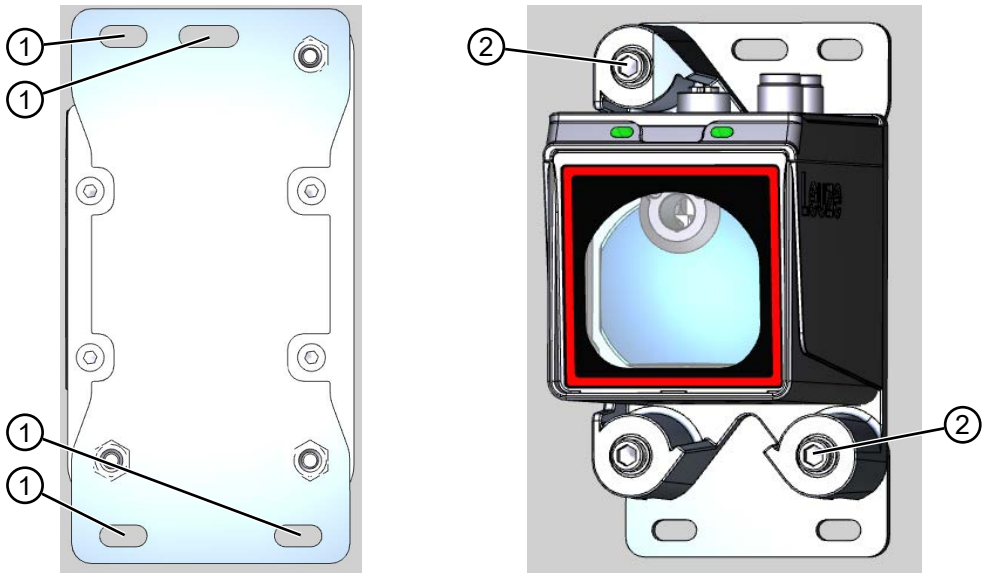

1 Slotted holes for mounting
2 Adjustment screws with hexagon socket WAF4

Fig. 5.2: Mounting with pre-mounted alignment unit

- Mount using four M5 screws.
- Guide the four M5 screws through the slotted holes of the alignment unit (1) and through the component to which the AMS 100i is to be attached.
- Secure the screws with a lock washer to protect against loosening caused by vibrations.

Aligning laser light spot

- Undo the adjustment screws WAF4 (2) a few turns.
- Align the laser light spot so that it always hits the center of the opposing reflector, both at close range as well as at the maximum measurement distance.
- Tighten the adjustment screws WAF4 (2).

To ensure that the light spot on the reflector does not move over the reflector across the entire measurement distance, the reflector and AMS should be installed vertically. If the light spot does not move during the process, i.e. when the distance changes, then installation is vertical.

5.2.2 Mounting with adapter plate (BT)

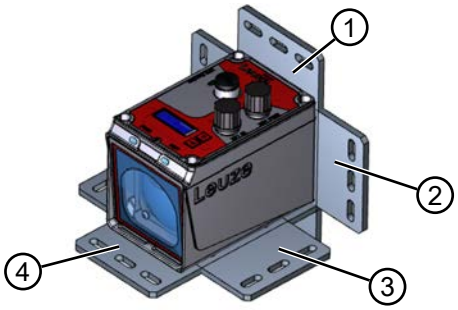

1 Mounting option 1
2 Mounting option 2
3 Mounting option 3
4 Mounting option 4

Fig. 5.3: Mounting options with adapter plate

- Position the adapter plate using one of the various options (1-4).
- Guide four screws (M4) from the rear side through the holes in the adapter plate.
- Screw the four screws (M4) into the internally threaded holes in the AMS 100i housing.

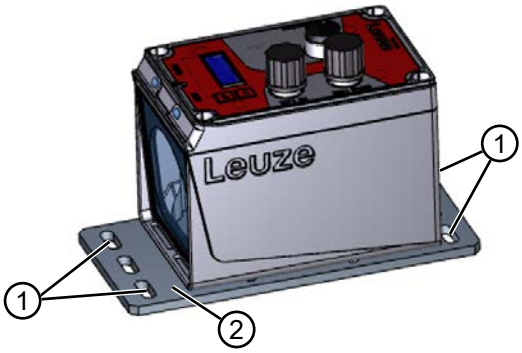

1 Slotted holes for mounting
2 Adapter plate (BT)

Fig. 5.4: Mounting example with adapter plate (BT)

- Guide four screws (M5) through the slotted holes (1) of the adapter plate (2) and through the component to which the AMS 100i is to be attached.
- Secure the screws with lock washers and nuts.

Aligning laser light spot

To ensure that the light spot on the reflector does not move over the reflector across the entire measurement distance, the reflector and AMS should be installed vertically. If the light spot does not move during the process, i.e. when the distance changes, then installation is vertical.

5.2.3 Mounting without accessories

- Mount using the four screws (M4).
- Guide the four screws (M4) from the rear side through the component to which the AMS 100i is to be secured.
- Screw the screws (M4) into the internally threaded holes of the AMS 100i housing.

Aligning laser light spot

To ensure that the light spot on the reflector does not move over the reflector across the entire measurement distance, the reflector and AMS should be installed vertically. If the light spot does not move during the process, i.e. when the distance changes, then installation is vertical.

5.2.4 Parallel mounting

Definition of the term "parallel spacing"

The dimension X describes the “parallel spacing” of the inner edges of the two laser light spots on the reflector.

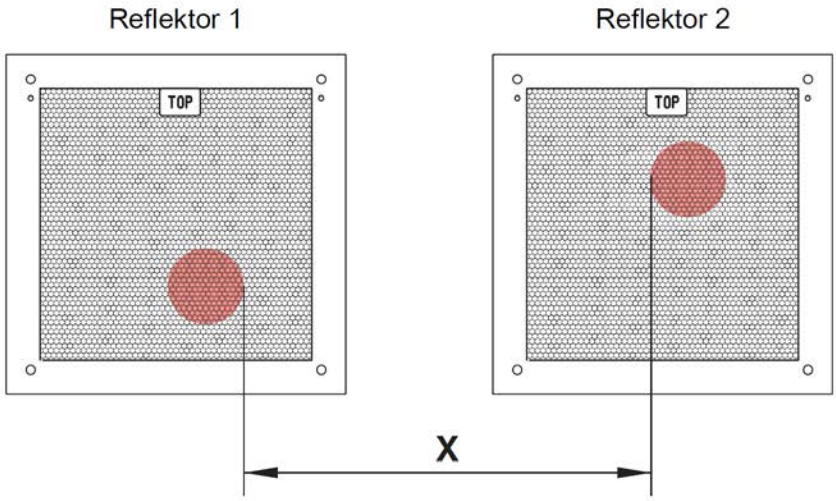

Fig. 5.5: Laser light spots parallel spacing

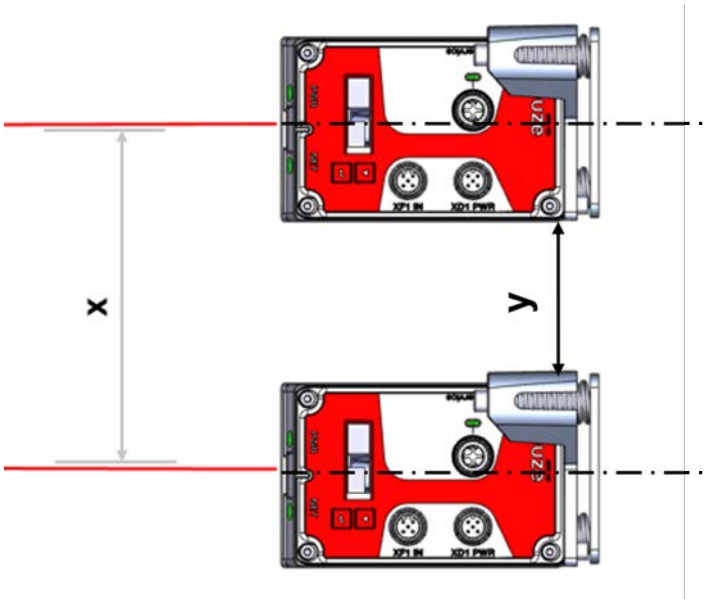

Fig. 5.6: Parallel mounting

The diameter of the light spot increases with distance.

	AMS 100i
Max. measuring distance	200 m
Light spot diameter	≤ 160 mm

Thus, the center-to-center spacing of the two AMS 100i devices with respect to one another can be calculated as a function of the maximum measurement distance.

To define the minimum parallel spacing between two AMS 100i devices, it is necessary to distinguish between three different arrangements of AMS 100i and reflectors.

The AMS 100i are mounted stationary and in parallel on one plane.
Both reflectors move independently of one another at different distances to the AMS 100i.

Minimum parallel spacing X of the two laser light spots:

Formula no. 1: X = 100 mm + (max. measuring distance in mm × 0.01)

The AMS 100i are mounted stationary and in parallel on one plane.
Both reflectors move in parallel at the same distance to the AMS 100i..

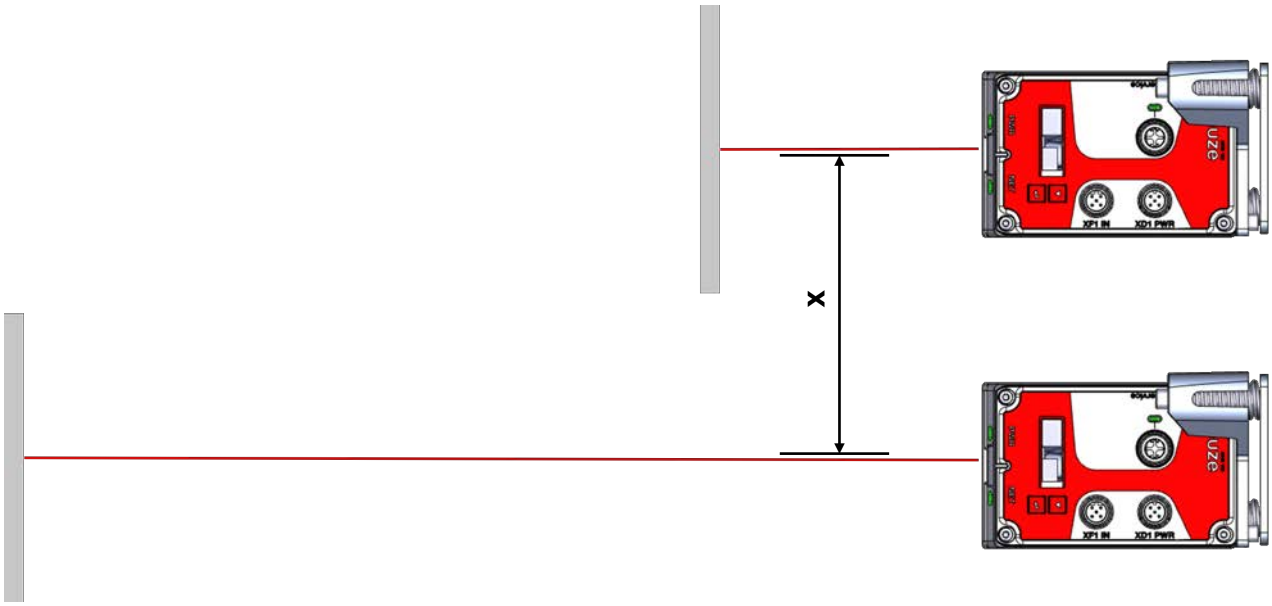

Fig. 5.7: Parallel mounting with moving reflectors

Measuring distance up to 200 m: see formula no. 1

The reflectors are mounted stationary and in parallel on one plane.
Both AMS 100i move independently of one another at different or the same distances to the reflectors.

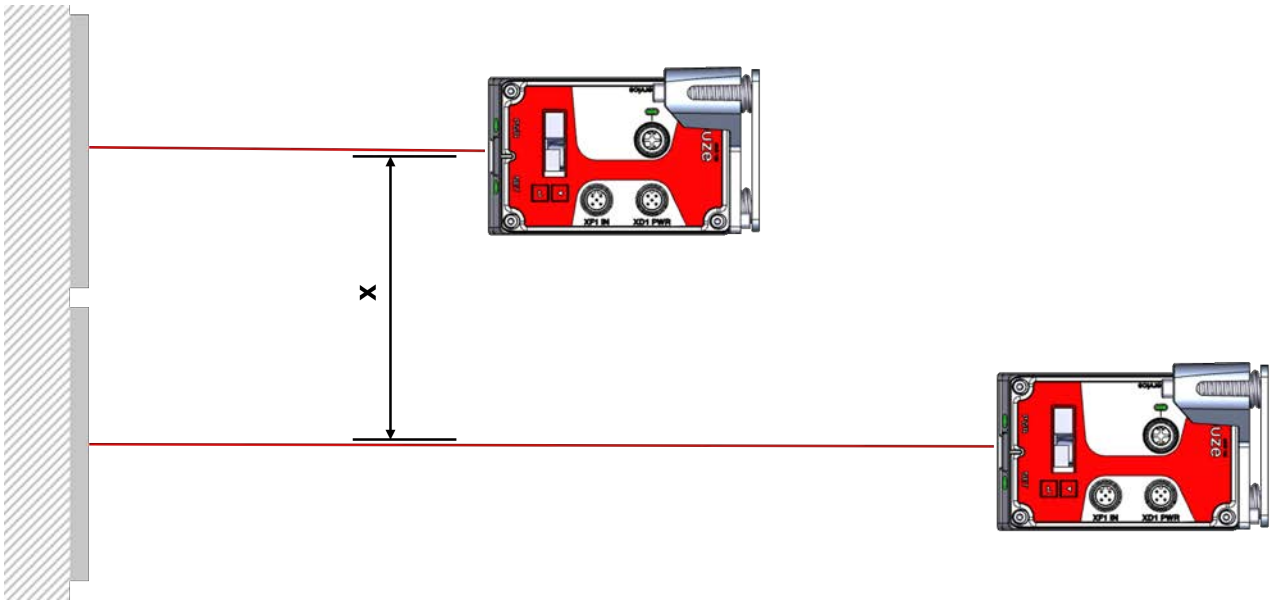

Fig. 5.8: Parallel mounting with moving AMS 100i units

Measuring distance up to 200 m: see formula no. 1

NOTICE
Note that when the AMS 100i units are mounted in a mobile manner, travel tolerances could cause the two laser light spots to move towards each other. ↳ Take the travel tolerances of the vehicle into account when defining the parallel spacing of adjacent AMS 100i units.

5.2.5 Parallel mounting of and DDLS optical data transmission

The optical data transceivers of the DDLS series and the AMS 108i do not interfere with one another. Depending on the size of the reflector used, the DDLS can be mounted with a minimum parallel spacing of 100 mm to the AMS 108i. The parallel spacing is independent of the distance.

5.2.6 Mounting with laser beam deflector units

The two available deflector units are used for the 90° deflection of the laser beam, see chapter 13.3 "Accessories – Mounting".

NOTICE
The deflector units are designed for a maximum operating range of 40 m. Longer distances can be achieved by independently optimizing the mechanical conditions.

Mounting of deflector unit with integrated mounting bracket

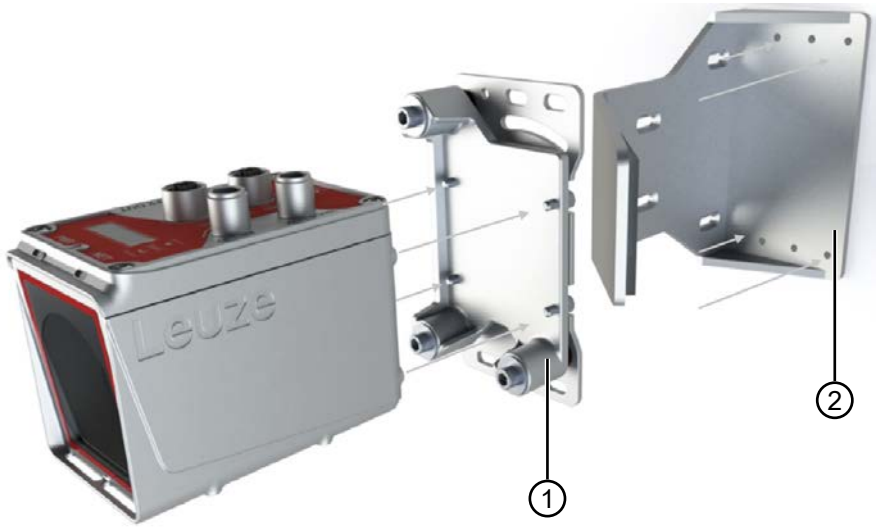

1 Pre-mounted alignment unit BTA
2 Deflector unit US AMS 02

Fig. 5.9: Mounting with laser beam deflector unit

✓ To use the US AMS 02 deflector unit, an AMS 1xxi BTA must be used, i.e., one equipped with the BTA alignment device (see chapter 12.3 "Dimensioned drawings").

↳ Use the four M5 screws to mount the deflector unit.

↳ Screw the AMS 100i together with the pre-mounted alignment unit (1) to the US AMS 02 deflector unit (2).

↳ Secure the screws with a lock washer to protect against loosening caused by vibrations.

The AMS 100i can be mounted in the deflector unit in two directions so that the cables lead off in the preferred direction.

In addition, the deflector unit can be mounted either underneath or on the rear side.

If deflection to the left or right is required, the entire deflector unit can be mounted accordingly.

The deflector unit is mounted on plane-parallel, flat walls or system parts. For error-free position measurement, there must be an unobstructed line-of-sight between the AMS 100i and the deflecting mirror as well as between the deflecting mirror and the reflector.

Mounting of deflector unit without mounting bracket

The US 1 OMS deflector unit and the AMS 100i are mounted separately.

- When mounting, make certain that the laser light spot of the AMS 100i is aligned with the center of the deflecting mirror.

To align the laser light spot with the reflector see chapter 5.2 "Mounting the device".

5.3 Mounting the reflector

The reflective tapes have a protective film that is easy to peel off.

- Remove the protective film before putting the overall system into operation.

Self-adhesive reflective tape

- Bond the self-adhesive reflective tapes of the "Reflective tape …x…-**S**" series to a flat, clean and grease-free surface. It is recommended to use a separate carrier plate (not included in the scope of delivery).
- Using a sharp tool, cut the tape along the side of the prism structure.
- Tilt the reflective tape; see chapter 5.3.1 "Pitch of the reflector".

Reflective tape on carrier plate

The reflective tapes of the "Reflective tape …x…-**M**" series have corresponding mounting holes.

Spacer sleeves are provided to enable mounting at the necessary pitch angle, see chapter 5.3.1 "Pitch of the reflector".

Reflective tape with heating

The reflective tapes of the "Reflective tape …x…-**H**" series have corresponding mounting holes.

Due to the voltage supply affixed on the rear, the reflector cannot be mounted flat. Four spacer sleeves in two different lengths are supplied. Use the spacer sleeves to ensure separation from the wall as well as to provide the necessary pitch for avoiding surface reflection see chapter 5.3.1 "Pitch of the reflector".

WARNING

Electrical work!

Electrical work must be carried out by a certified electrician.

- Connect the cable to the nearest power distribution point.
- Observe the current consumptions listed in the technical data, see chapter 12.2.3 "Reflective tape with heating".

5.3.1 Pitch of the reflector

- Connect the voltage supply of the AMS 100i.
- Mount the combination consisting of laser measurement system and reflective tape/reflector so that the laser light spot hits the film as centered as possible and without obstruction.
- To do so, use the mounting and adjustment options provided on the AMS 100i (see chapter 5.2 "Mounting the device").

NOTICE

The reflector must be positioned at an angle. Use the spacer sleeves for this purpose.

The correct pitch is given in the table "Reflector pitch".

Tab. 5.1: Reflector pitch

Reflector type	Pitch using spacer sleeves	
Reflective tape 200x200-S Reflective tape 200x200-M	2 x 5 mm	
Reflective tape 200x200-H	2 x 15 mm	2 x 20 mm
Reflective tape 500x500-S Reflective tape 500x500-M	2 x 10 mm	
Reflective tape 500x500-H	2 x 15 mm	2 x 25 mm
Reflective tape 749x914-S	2 x 20 mm	
Reflective tape 914x914-S Reflective tape 914x914-M	2 x 20 mm	
Reflective tape 914x914-H	2 x 15 mm	2 x 35 mm

The spacer sleeves are included in the scope of delivery of reflective tapes …-M and …-H.

NOTICE

Reliable operation, the max. operating range and accuracy of the AMS 100i can only be achieved with the reflective tape specified by Leuze. Correct operation cannot be guaranteed if other reflectors are used.

Pitch of reflective tapes …-S and …-M

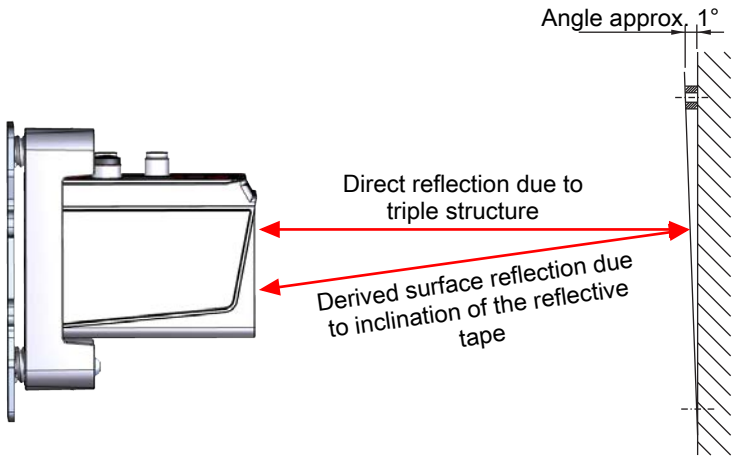

Fig. 5.10: Mounting the reflector

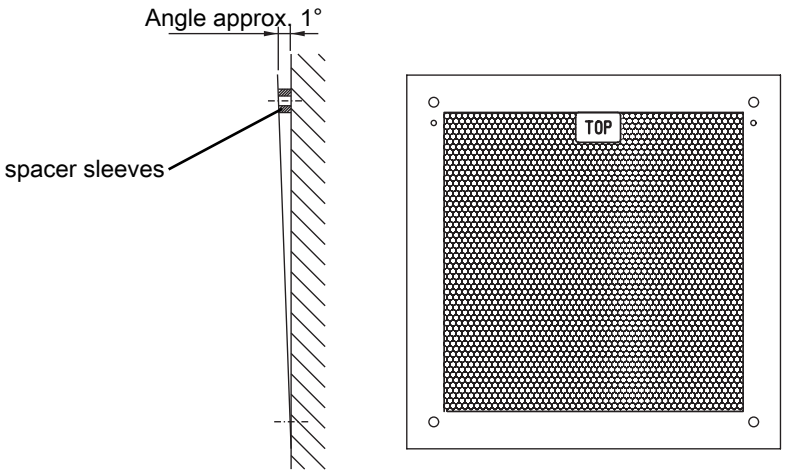

Fig. 5.11: Pitch of the reflector

Pitch of reflective tapes …-H

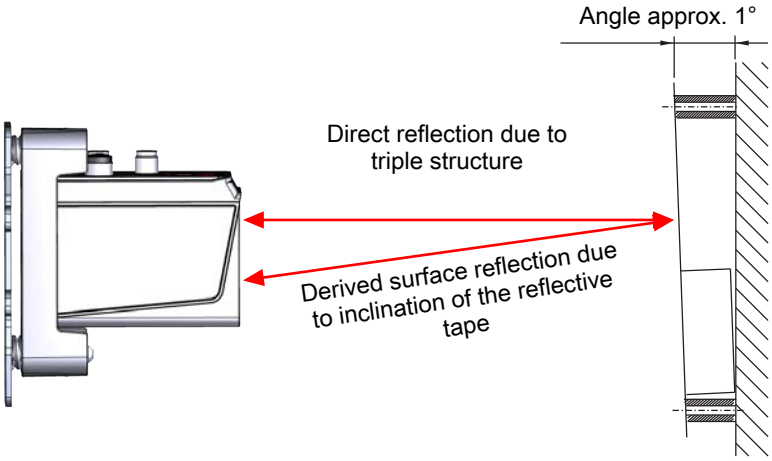

Fig. 5.12: Mounting of heated reflectors

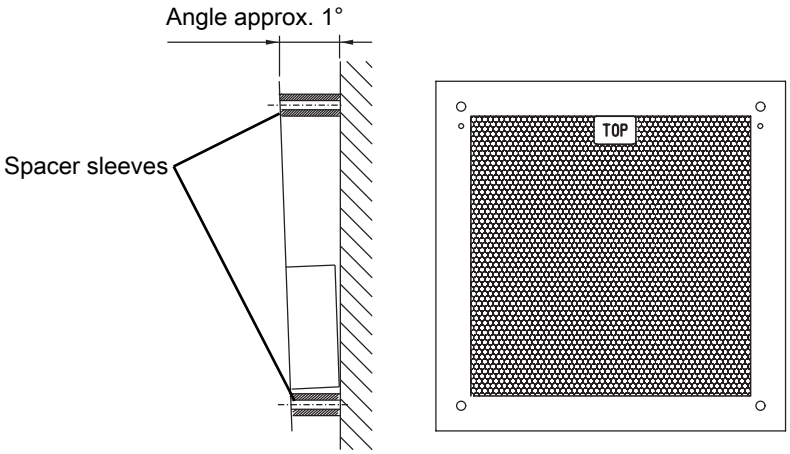

Fig. 5.13: Pitch of the heated reflector

6 Electrical connection

CAUTION

- Before connecting the device, be sure that the supply voltage agrees with the value printed on the name plate.
- Only allow competent persons to perform the electrical connection.
- Ensure that the functional earth (FE) is connected correctly. Fault-free operation is only guaranteed if the functional earth is connected properly.
- If faults cannot be rectified, take the device out of operation. Protect the device from accidentally being started.

CAUTION

UL applications!

For UL applications, the device must be powered by a PS2 in accordance with EN / IEC / UL 62368-1 or an LPS in accordance with EN / IEC / UL 60950-1 or NEC Class 2.

NOTICE

Protective Extra Low Voltage (PELV)!

The device is designed in accordance with protection class III for supply with PELV (Protective Extra-Low Voltage).

NOTICE

Degree of protection IP65

Degree of protection IP65 is achieved only if the connectors are screwed into place and caps installed.

The AMS 100i is connected using variously coded M12 connectors.

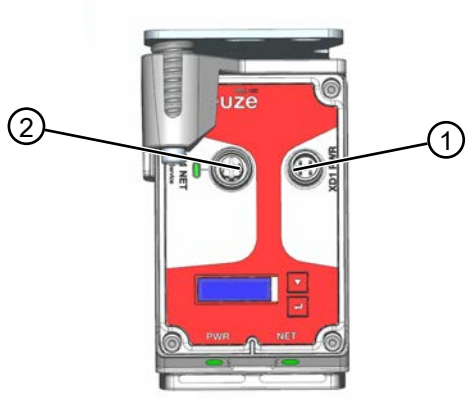

1 PWR – voltage supply / switching input/output
2 Ethernet / Service

Fig. 6.1: AMS108i connections

The corresponding mating connectors and preassembled cables are available as accessories for all connections, see chapter 13.5 "Accessories – connection technology".

6.1 PWR – voltage supply / switching input/output

M12 connector, 5-pin, A-coded

Tab. 6.1: PWR pin assignment

	Pin	Designation	Assignment
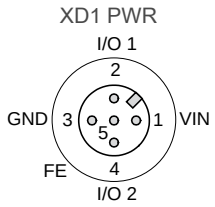	1	VIN	Positive supply voltage +18 – +30 V DC
	2	I/O 1	Switching input/output 1
	3	GNDIN	Negative supply voltage 0 V DC
	4	I/O 2	Switching input/output 2
	5	FE	Functional earth
	Thread	FE	Functional earth (housing)

For configuration of the switching input/output, see chapter 7 "Starting up the device – Ethernet TCP/IP".

6.2 Ethernet TCP/IP

NOTICE

The AMS 108i can communicate via TCP/IP and UDP. Standard is TCP/IP. In the case of communication via UDP, the "UDP" protocol must be activated via the display under the menu item "Ethernet" - "Host communication".

Standalone operation in Ethernet network

During stand-alone operation of the AMS 108i, the host interface of the superior system is connected to HOST/BUS IN. A star structure (Ethernet structure) is thus possible.

6.3 Ethernet TCP/IP / Service

M12 connection, 4-pin, female, D-coded

Tab. 6.2: Ethernet TCP/IP / Service pin assignment

	Pin	Designation	Assignment
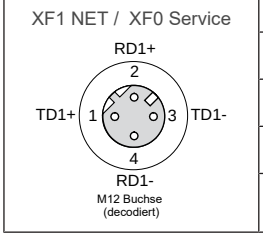	1	TD+	Transmit Data +
	2	RD+	Receive Data +
	3	TD-	Transmit Data -
	4	RD-	Receive Data -
	Thread	FE	Functional earth (housing)

7 Starting up the device – Ethernet TCP/IP

7.1 General information on Ethernet

The AMS 108i is designed as an Ethernet device (acc. to IEEE 802.3) with a standard baud rate of 10/100 Mbit/s. A fixed MAC ID is assigned to each AMS 108i by the manufacturer; this ID cannot be changed.

The AMS 108i automatically supports the transmission rates of 10 Mbit/s (10Base T) and 100 Mbit/s (100Base TX), as well as auto-negotiation and auto-crossover.

The AMS 108i features multiple M12 connectors / sockets for the electrical connection of the supply voltage, the interface and the switching inputs or switching outputs.

Additional information on the electrical connection can be found in see chapter 6 "Electrical connection".

The AMS 108i supports the following protocols and services:

- TCP/IP (client / server)
- UDP
- DHCP
- ARP
- PING

For communication with the superior host system, the corresponding TCP/IP protocol (client/server mode) or UDP must be selected.

7.2 Ethernet – star topology

The AMS 108i can be operated as a single device (stand-alone) in an Ethernet star topology with individual IP address.

The address can either be set permanently via display or assigned dynamically via a DHCP server.

7.3 Manual configuration of the IP address

	NOTICE
	To set the network addresses, parameter enable must be activated.

If your system does not include a DHCP server or if the IP addresses of the devices are to be set permanently, proceed as follows:

- Have the network administrator specify the data for IP address, net mask and gateway address of the AMS 108i.
- Set these values on the AMS 108i.
- In the main menu, press the [ENTER] button to enter the Parameter menu.
- Use the [UP] [DOWN] buttons to select the Ethernet menu item.
- Press the [ENTER] button to enter the Ethernet menu.
- Use the [UP] [DOWN] buttons to select the Ethernet interface menu item.
- Press the [ENTER] button to enter the Ethernet menu.
- Use the buttons to successively select the Address, Gateway and Net mask menu items and set the desired values.
- Exit the Ethernet menu by pressing the [ESCAPE] button.

Address Link Label:

- The "Address Link Label" is an additional stick-on label that is affixed to the device. The "Address Link Label" contains the MAC address (Media Access Control address) of the device and makes it possible to enter the IP address and the device name manually. The area of the "Address Link Label" on which the MAC address is printed can be separated from the remainder of the stick-on label if necessary using the perforation.
- The "Address Link Label" can be removed from the device and affixed in the installation and layout diagrams to designate the device.
- Once it is affixed in the documents, the "Address Link Label" establishes a unique reference between the mounting location, the MAC address or the device, and the associated control program. The time-consuming searching, reading, and manually writing down of the MAC addresses of all devices installed in the system are eliminated.

7.4 Automatically setting the IP address

If your system includes a DHCP server that is to be used to assign the IP addresses, note the following:

DHCP address assignment is deactivated by default. To activate DHCP address assignment, you must first activate parameter enable.

Starting at the main menu, use the buttons and the enter button to navigate to the Ethernet interface menu:

- Use the arrow buttons to select the DHCP activated menu item
- Press the enter button to enter the DHCP activated menu.
- Use the arrow buttons to select the ON menu item.
- Press the enter button to activate DHCP activation.
- ON DHCP activation is now switched on.
- Exit the Ethernet interface menu with the escape button.

7.5 Setting the Ethernet host communication

The AMS 108i can communicate via TCP/IP and UDP. Standard is TCP/IP. In the case of communication via UDP, the "UDP" protocol must be activated via the display under the menu item "Ethernet" - "Host communication". UDP and TCP/IP can be activated simultaneously and used in parallel.

If you would like to use the TCP/IP protocol, you must also define whether the AMS 108i is to operate as a TCP client or as a TCP server.

- Contact your network administrator to determine which communication protocol is used.

7.6 Communication protocol (Leuze binary protocol via TCP/IP)

The Leuze binary protocol is integrated within the TCP/IP and UDP communication in the user data area.

7.7 Request telegram to the AMS 108i

ETHERNET HEADER (Ethernet addresses)	IP HEADER (IP addresses)	TCP HEADER (port numbers)	TCP USER DATA AREA	FCS

TCP user data area

The Leuze binary protocol has a proprietary header. This is part of the user data and has the following functions:

- Transaction ID

The transaction ID enables unique assignment of a request telegram sent to the AMS 108i, to the response telegram. A transaction ID that is also used in the response telegram is entered in the request telegram. Simple incrementation of the transaction ID can, for example, ensure consecutive processing.

- Protocol ID

The identifier (0x4C31) is defined as the protocol ID for the AMS 108i binary protocol. The protocol ID remains unchanged for the binary protocol.

- Length

The number of consecutive user data bytes is entered. The TCP user data area is 2 bytes in length in a request telegram and 6 or 8 bytes in the response telegram, depending on the command.

- 0xFF

Reserve byte with the entry 0xFF.

Transaction ID (16 bit)	Protocol ID (16 bit)	Length (16 bit)	0xFF (8 bit)	Function code (8 bit)

Function code

Using the function code, the functions described in the table below can be activated on the AMS 108i.

Byte value		Function
Hex	Dec	
0xF1	241	Transfer single position value
0xF2	242	Start cyclical transfer of the position value
0xF3	243	Stop cyclical transfer
0xF4	244	Laser on
0xF5	245	Laser off
0xF6	246	Transfer single velocity value
0xF7	247	Start cyclical transfer of the velocity value
0xF8	248	Transfer single position and velocity value

Example: Transfer single position value

- Transaction ID (16 bit):

Value between 0x0000 and 0xFFFF

- Protocol ID (16 bit):

Always 0x4C31

- Length (16 bit):

Always 0x0002

- 0xFF (8 bit):

Always 0xFF

- Function code (8 bit):

0xF1 (depending on function, value between 0xF1 and 0xF8)

7.8 Response telegram from the AMS 108i

ETHERNET HEADER (Ethernet addresses)	IP HEADER (IP addresses)	TCP HEADER (port numbers)	TCP USER DATA AREA	FCS

7.9 TCP user data area

Transaction ID (16 bit)	Protocol ID (16 bit)	Length (16 bit)	0xFF (8 bit)	Status (16 bit)	Data (24 bit)

Response telegram for function code F1 to F8

Tab. 7.1: Response telegram

Byte	Bit 7	Bit 6	Bit 5	Bit 4	Bit 3	Bit 2	Bit 1	Bit 0
0	0	LASER	IO2	IO1	0	0	DIR	MOV
1	READY	LSR	TMP	ERR	ATT	PLB	OVFL	SIGN
2	D23	D22	D21	D20	D19	D18	D17	D16
3	D15	D14	D13	D12	D11	D10	D9	D8
4	D7	D6	D5	D4	D3	D2	D1	D0
5	V15	V14	V13	V12	V11	V10	V9	V8
6	V7	V6	V5	V4	V3	V2	V1	V0

Laser (actuation)
0 = Laser ON
1 = Laser OFF

IO1
0 = Signal level not active
1 = Signal level active

IO2
0 = Signal level not active
1 = Signal level active

DIR
When the movement status is activated, this bit indicates the movement direction:
0: Positive direction
1: Negative direction

MOV
Signals whether a movement > 0.1 m/s is currently being detected:
0 = No movement detected
1= Movement detected

Ready
0 = AMS not ready
1 = AMS ready

LSR (laser prefailure message)
0 = OK
1 = Laser warning

TMP (temperature warning)
0 = ok
1 = Upper or lower temperature limit violated

ERR (hardware error)
0 = No error
1 = Hardware error

ATT (evaluation/received signal level warning)
0 = Received signal level ok
1 = Received signal level warning

PLB (plausibility of measurement values)
0 = Measurement values ok
1 = Implausible measurement value

OVFL (overflow; measurement value greater than 24 bit)
0 = ok
1 = Overflow

Sign (sign of measurement value)
0 = Positive
1 = Negative

D0 - D23 (distance value)
D0 = LSB; D23 = MSB

8 Starting up the device – webConfig tool

With the Leuze webConfig tool, a web-technology based, graphical user interface is available for AMS configuration and diagnosis.

The webConfig tool can be run on any Internet-ready PC. The webConfig tool uses HTTP as communication protocol and the client-side restriction to standard technologies (HTML, JavaScript and AJAX) that are supported by modern browsers.

NOTICE
Configuration changes via the webConfig tool have no effect in Ethernet TCP/IP! ↳ **Always** perform the basic configuration using the display. In process operation, only the parameters set via the device are active. If you access the AMS using the webConfig tool, the AMS will be disconnected from the Ethernet TCP/IP connection. All parameters set via the device are initially active.

NOTICE
The webConfig tool is offered in the following languages: German, English, Chinese, Italian, Spanish, French, Portuguese, Korean

8.1 System requirements

8.2 Start webConfig tool

NOTICE
The webConfig tool is only accessible on the AMS 108i via the Service port.

NOTICE
The webConfig tool is only accessible on the AMS 158i via the Service port.

↳ Connect the supply voltage to the AMS.

↳ Connect the AMS service interface to the PC.
The connection to the AMS service interface is made via the PC's RJ45 Ethernet interface. Use an Ethernet cable with a D-coded M12 connector and an RJ45 connector.
An Ethernet adapter also allows you to use the USB interface on the PC. To do this, use a standard cable with a Type A USB connector and a D-coded M12 Ethernet connector.

↳ Start the webConfig tool using your PC's Internet browser with IP address: **http://192.168.60.101**. This is the Leuze standard service address for communication with absolute measuring systems.

⇨ The webConfig start page appears on your PC.

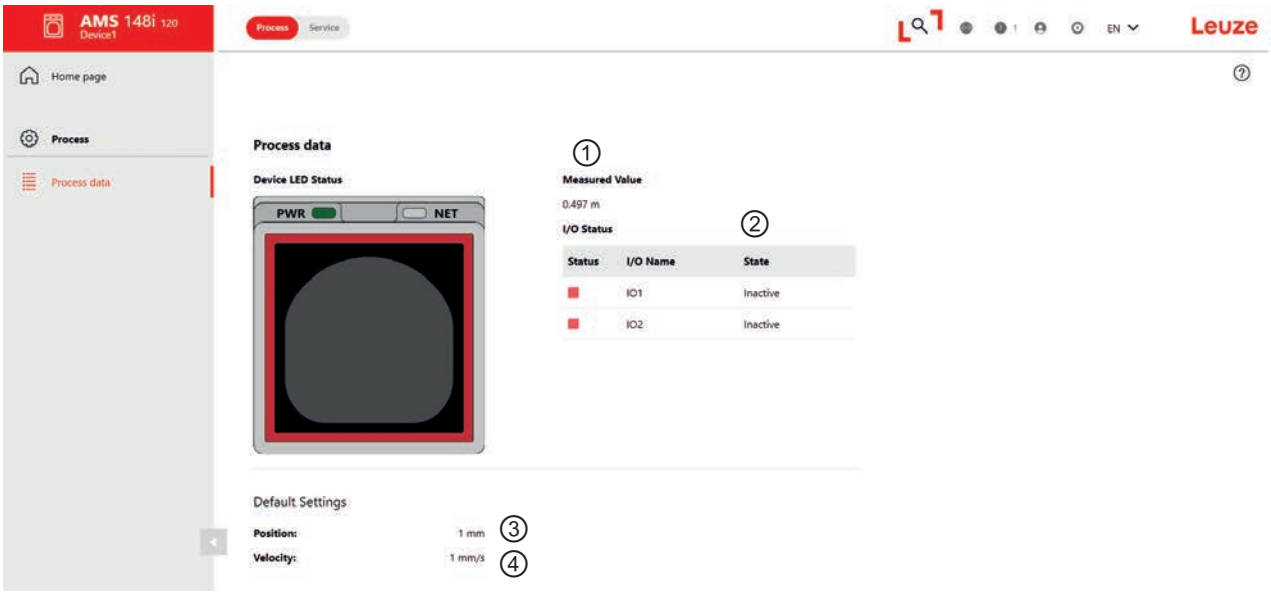

1 Current measurement value
2 I/O state 1/2
3 Position value resolution
4 Velocity value resolution

Fig. 8.1: webConfig tool start page (example)

NOTICE

The webConfig tool always starts in *Process* mode after startup.

8.3 Short description of the webConfig tool

The menus and dialog boxes of the webConfig tool are intuitive to operate and provide texts and tool tips. The start page of the webConfig tool displays the current process information.

8.3.1 Switching operating mode

You can use the webConfig tool to switch between the following operating modes:

Process

- The device is connected to the control or to the PC.
- Process communication with the control is active and position values are provided via the interfaces.
- The switching inputs/outputs are activated.
- Allows read-only access to the process data and diagnosis registers.

Service

- The *Service* operating mode enables read and write access to all registers.
- The process communication to the control is interrupted and no position values are provided via the interfaces.
- The switching inputs/outputs are deactivated.

Located in the top left of every page of the webConfig tool is a software switch for changing the operating mode (Process – Service).

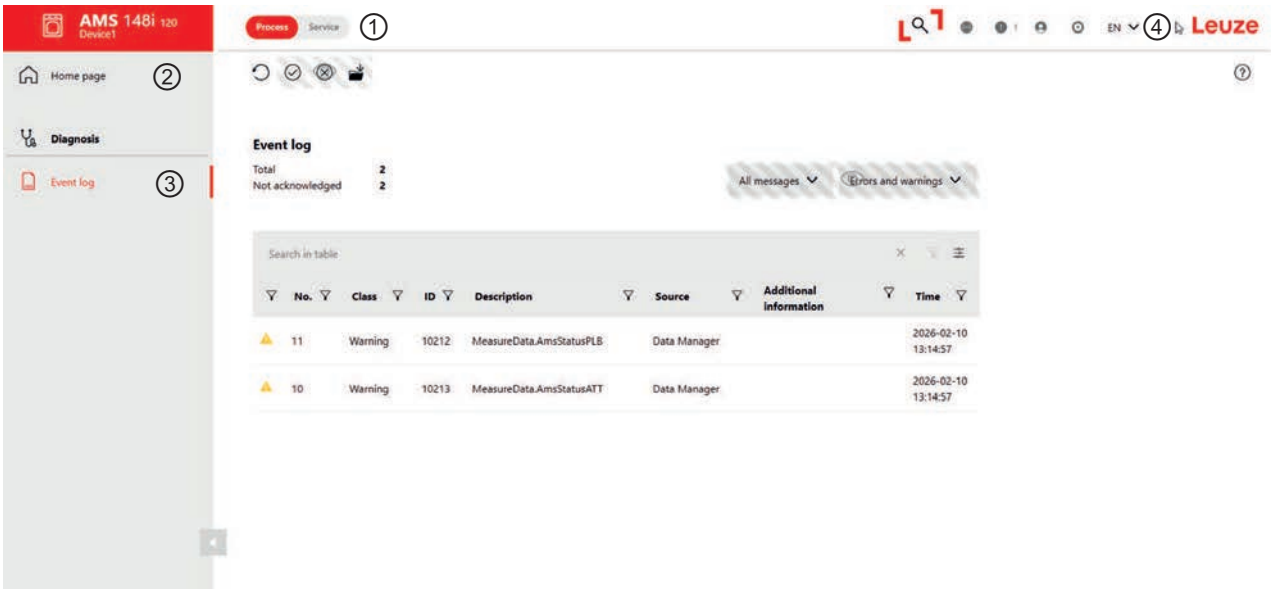

1 Switching between the process and service operating modes
2 Main menu
3 Diagnosis menu structure
4 Language switching

Fig. 8.2: webConfig tool overview

8.3.2 Menu overview

The [Home page] button displays the webConfig tool's menu overview.

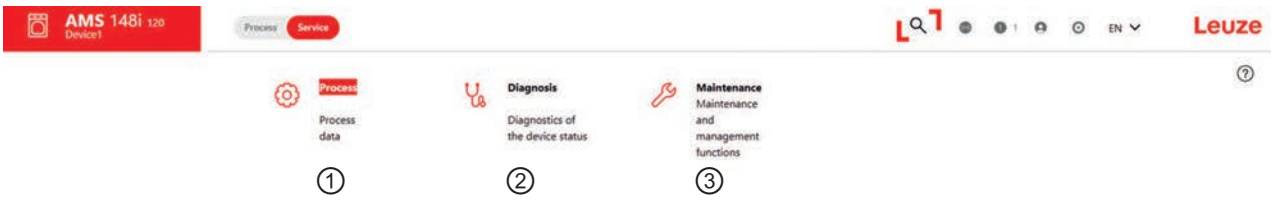

Fig. 8.3: webConfig menu overview

1. **Process**
   - Information on the current measurement value
   - Information about switching inputs and outputs
2. **Diagnosis**
   - Event logging of info, warnings and errors
3. **Maintenance**
   - User management
   - Backup/Restore
   - Firmware update
   - System clock

9 Care, maintenance and disposal

Cleaning

If there is dust on the device or the warning message ATT is issued:

- Clean the device with a soft cloth; use a cleaning agent (commercially available glass cleaner) if necessary.
- Also check the reflector for possible contamination.

	NOTICE
	**Do not use aggressive cleaning agents!** Do not use aggressive cleaning agents such as thinner or acetone for cleaning the device. The use of such solvents can dull the reflector, the housing window and the display.

Maintenance

The device does not normally require any maintenance by the operating company.

Repairs to the device must only be carried out by the manufacturer.

- For repairs, contact your responsible Leuze subsidiary or Leuze customer service (see chapter 11 "Service and support").

Disposing

	NOTICE
	For disposal observe the applicable national regulations regarding electronic components.

10 Diagnostics and troubleshooting

10.1 Status messages

The status messages are written in a ring memory with 25 positions. The ring memory is organized according to the FIFO principle. No separate activation is necessary for storing the status messages. Power OFF clears the ring memory.

Example:



Fig. 10.1: Example of status message

Structure of status messages

n: model/no.

n	Memory position in the ring memory
Type	Type of message: I = info, W = warning, E = error, F = severe system error
No.	Internal error detection

- Press the [ENTER] button to display the ring list of the messages.
- Use the [DOWN] button to navigate to all entries in succession.
- To exit the ring list, press the [ENTER] button again.

10.2 LED indicators

Tab. 10.1: PWR LED

PWR LED display	Possible error cause	Measure
OFF	No supply voltage connected	Check supply voltage
	Hardware error	Send in device
Flashes red	Light beam interruption	Check alignment
	Plausibility error	Traverse rate > 10 m/s
Red, continuous light	Hardware error	For error description, see display, It may be necessary to send in the device

Tab. 10.2: NET LED

NET LED display	Possible error cause	Measure
OFF	No supply voltage connected	Check supply voltage
	Incorrect wiring	Check wiring
	Ethernet deactivated	Activate Ethernet interface

10.3 Display messages

Tab. 10.3: Warning messages in display

Display	Error no.	Possible error message	Measure
PLB (implausible measurement values)	10212	Laser beam interruption	Laser spot must always be incident on the reflector
		Laser spot outside of reflector	Traverse rate < 10 m/s?
		Measurement range for maximum distance exceeded	Restrict traversing path or select AMS with larger measurement range
		Velocity greater than 10 m/s	Reduce velocity
		Ambient temperature far outside permissible range (TMP display; PLB)	Provide cooling
ATT (insufficient received signal level)	10213	Reflector soiled	Clean reflector
		Glass lens of the AMS soiled	Clean glass lens
		Performance reduction due to snow, rain, fog, condensing vapor or heavily polluted air (oil mist, dust)	Optimize usage conditions
		Laser spot only partially on reflector	Check alignment
		Protective film on reflector	Remove protective film from reflector
TMP (operating temperature outside of specification)	10210	Ambient temperatures outside specified range	In cold temperatures, an AMS with heating may help. If temperatures are too high, provide cooling or change mounting location.
LSR (laser diode warning)	10211	Laser diode prefailure message	Send in device at next possible opportunity to have laser diode replaced. Have replacement device ready.
ERR (hardware error)	-	Indicates an uncorrectable error in the hardware	Send in device for repair

11 Service and support

Service hotline

You can find the contact information for the hotline in your country on our website **www.leuze.com** under **Contact & Support**.

Repair service and returns

Defective devices are repaired in our service centers competently and quickly. We offer you an extensive service packet to keep any system downtimes to a minimum. Our service center requires the following information:

- Your customer number
- Product description or part description
- Serial number or batch number
- Reason for requesting support together with a description

Please register the merchandise concerned. Simply register return of the merchandise on our website **www.leuze.com** under **Contact & Support > Repair Service & Returns**.

To ensure quick and easy processing of your request, we will send you a returns order with the returns address in digital form.

What to do should servicing be required?

	NOTICE
	**Please use this chapter as a master copy should servicing be required!** ↳ Enter the contact information and fax this form together with your service order to the fax number given below.

Customer data (please complete)

Device type:	
Serial number:	
Firmware:	
Display messages	
Status of LEDs:	
Error description:	
Company:	
Contact person/department:	
Phone (direct dial):	
Fax:	
Street/No:	
ZIP code/City:	
Country:	

Leuze Service fax number:

+49 7021 573 - 199

12 Technical data

12.1 Optical laser measurement system

Tab. 12.1: Characteristic parameters

MTTF	27 years (at 25 °C)

Tab. 12.2: Measurement data

	AMS 108i 40	**AMS 108i 120**	**AMS 108i 200**
Measurement range	0.1 – 40 m	0.1 – 120 m	0.1 – 200 m
Accuracy	±2 mm	±2 mm	±3 mm
Reproducibility (1 sigma; typical values for standard filter types)	0.2 mm	0.2 mm	0.25 mm
Light spot diameter	≤ 40 mm	≤ 100 mm	≤ 160 mm
Output time	1 ms (1.7 ms for V1.1.2 and earlier)		
Response time (compatibility mode)	8 ms		
Basis for contouring error calculation	7 ms		
Resolution	Adjustable, see chapter 7 "Starting up the device – Ethernet TCP/IP"		
Temperature drift	≤ 1 mm/10K		
Ambient temperature sensitivity	1 ppm/K		
Air pressure sensitivity	0.3 ppm/hPa		
Traverse rate	≤ 10 m/s		
Boot time	18 s		
Operating temperature for standard version without integrated heating	-5°C – +60°C		
Operating temperature for devices with integrated heating	-30°C – +60°C		
Warmup time for devices with integrated heating	approx. 30 min at +24 V DC and a minimum ambient temperature of -30°C		

Tab. 12.3: Optical data

Light source	Laser, red
Laser class	2 (acc. to IEC 60825-1:2014)
Wavelength	660 nm
Impulse duration	≤ 0.8 µs
Max. output power (peak)	4 mW

Tab. 12.4: Electrical data

Supply voltage	18 – 30 V DC
Current consumption	≤ 250 mA/24 V DC
Heater current consumption	≤ 500 mA/24 V DC
VDE protection class	III

CAUTION

UL applications!

For UL applications, the device must be powered by a PS2 in accordance with EN / IEC / UL 62368-1 or an LPS in accordance with EN / IEC / UL 60950-1 or NEC Class 2.

NOTICE

Protective Extra Low Voltage (PELV)!

The device is designed in accordance with protection class III for supply with PELV (Protective Extra-Low Voltage).

Tab. 12.5: Controls and indicators

Operational controls	Membrane keyboard, 2 buttons
Display	LC display, 128x32 pixels
LED	2 LEDs, two-colored

Tab. 12.6: Mechanical data

Housing	Diecast aluminum
Optics cover	Glass
Weight	Approx. 1 kg
Degree of protection	IP65 (acc. to EN 60529) with screwed-on M12 connectors or mounted caps

Tab. 12.7: Environmental data

Ambient temperature • Operation • Operation with integrated device heating • Storage	 -5°C – +60°C -30°C – +60°C -30°C – +70°C
Relative air humidity	Max. 90%, non-condensing
Vibration	IEC 60068-2-6, test Fc
Shock	IEC 60068-2-27, test Ea
Noise	IEC 60068-2-64
Electromagnetic compatibility	EN 61000-6-2 EN 61000-6-4

12.2 Reflective tapes

12.2.1 Self-adhesive reflective tape

Tab. 12.8: Technical data of self-adhesive reflective tape

Feature	Reflective tape 200x200-S	Reflective tape 500x500-S	Reflective tape 914x914-S	REF 4-A-150x150	REF 4-A-300x300
Part no.	50104361	50104362	50108988	50141015	50141014
Film size	200x200 mm	500x500 mm	914x914 mm	150x150 mm	300x300 mm
Recommended application temperature for adhesive tape	+5 °C … +25 °C				
Temperature resistance, affixed	-40 °C … +80 °C				

12.2.2 Reflective tape on carrier plate

Tab. 12.9: Technical data of reflective tape on carrier plate

Feature	Reflective tape 200x200-M	Reflective tape 500x500-M	Reflective tape 914x914-M
Part no.	50104364	50104365	50104366
Film size	200x200 mm	500x500 mm	914x914 mm
Outer dimensions of carrier plate	250x250 mm	550x550 mm	964x964 mm
Weight	0.8 kg	4 kg	25 kg

12.2.3 Reflective tape with heating

Tab. 12.10: Technical data of reflective tape with heating

Feature	Reflective tape 200x200-H	Reflective tape 500x500-H	Reflective tape 914x914-H
Part no.	50115020	50115021	50115022
Voltage supply	230 V AC		
Power	100 W	600 W	1800 W
Current consumption	~ 0.5 A	~ 3 A	~ 8 A
Length of supply line	2 m		
Size of reflective tape	200x200 mm	500x500 mm	914x914 mm
Outer dimensions of base material	250x250 mm	550x550 mm	964x964 mm
Weight	0.5 kg	4.4 kg	13.7 kg
Temperature control	Controlled heating with the following switch-on and switch-off temperatures, measured at the reflector surface		
Switch-on temperature	~ 5 °C		
Switch-off temperature	~ 20 °C		
Operating temperature	-30°C – +70°C		
Storage temperature	-40°C – +80°C		
Air humidity	Max. 90%, non-condensing		

12.3 Dimensioned drawings

Optical laser measurement system AMS 108i

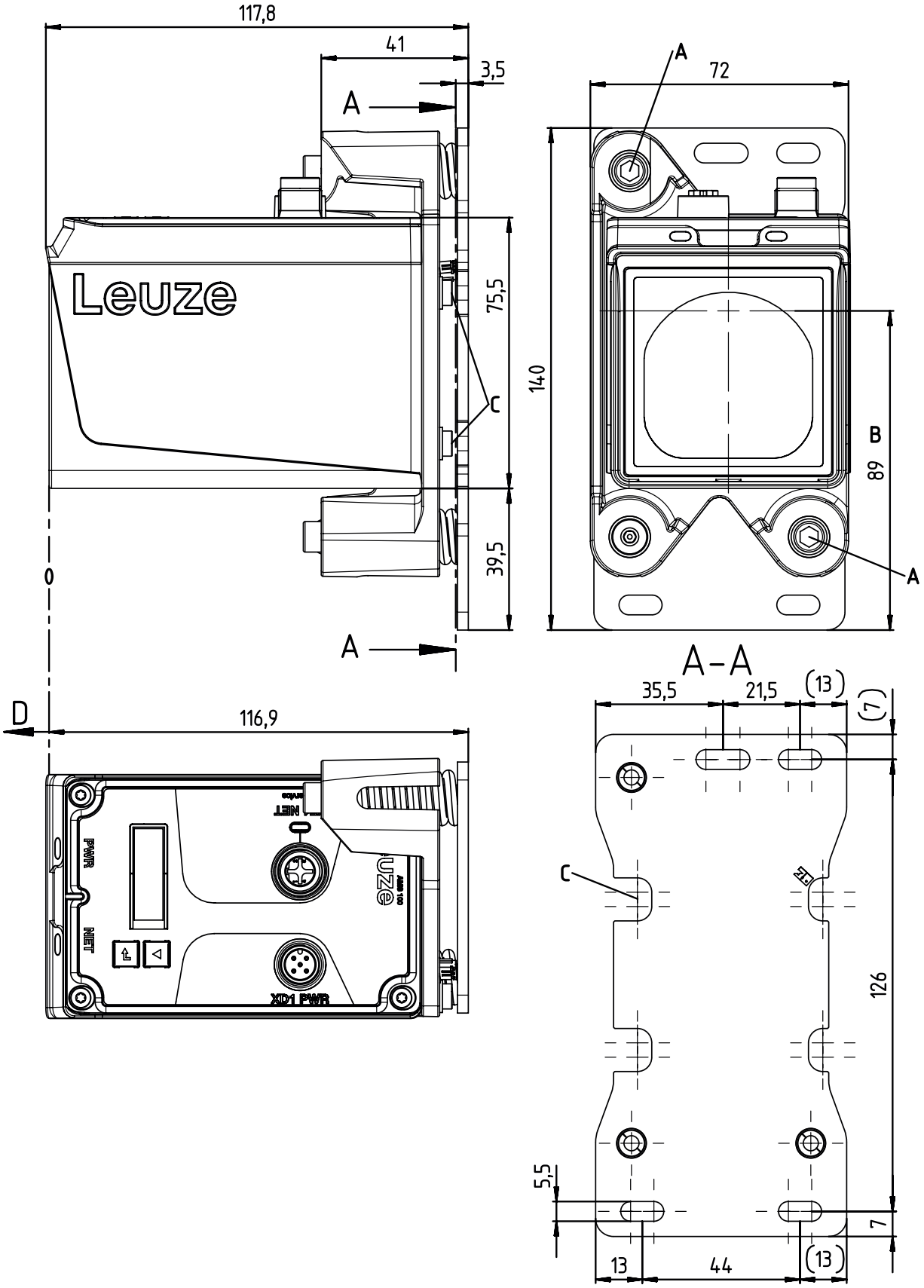

All dimensions in mm

Fig. 12.1: Optical laser measurement system AMS 108i

Optical laser measurement system AMS 158i

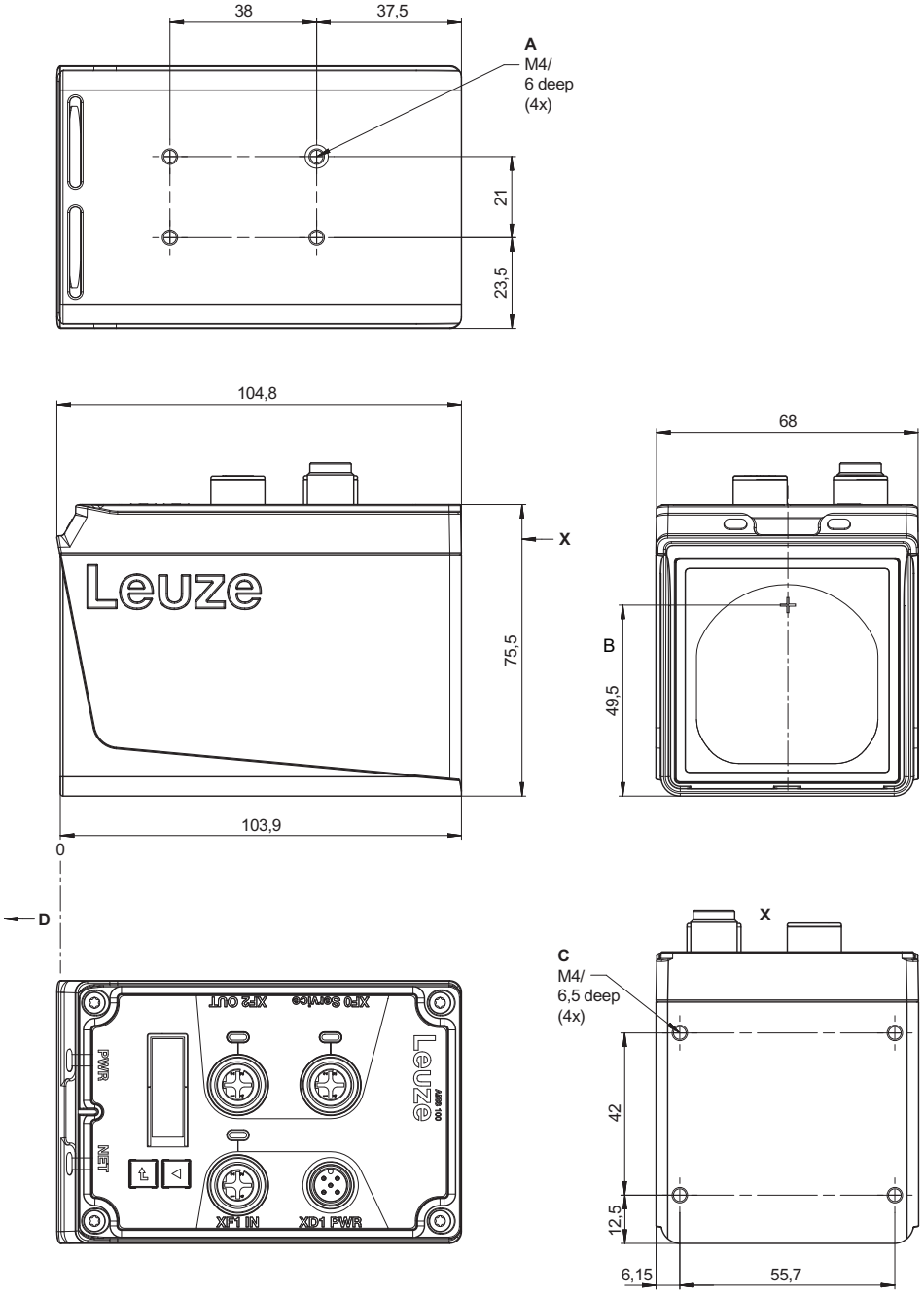

All dimensions in mm

A Mounting variant: Bottom of the device

B Optical axis

C Mounting options for the BTA alignment unit

D Zero point of the distance to be measured

Fig. 12.2: Optical laser measurement system AMS 158i

Alignment unit BTA 0100M or BTA 0100 M.5

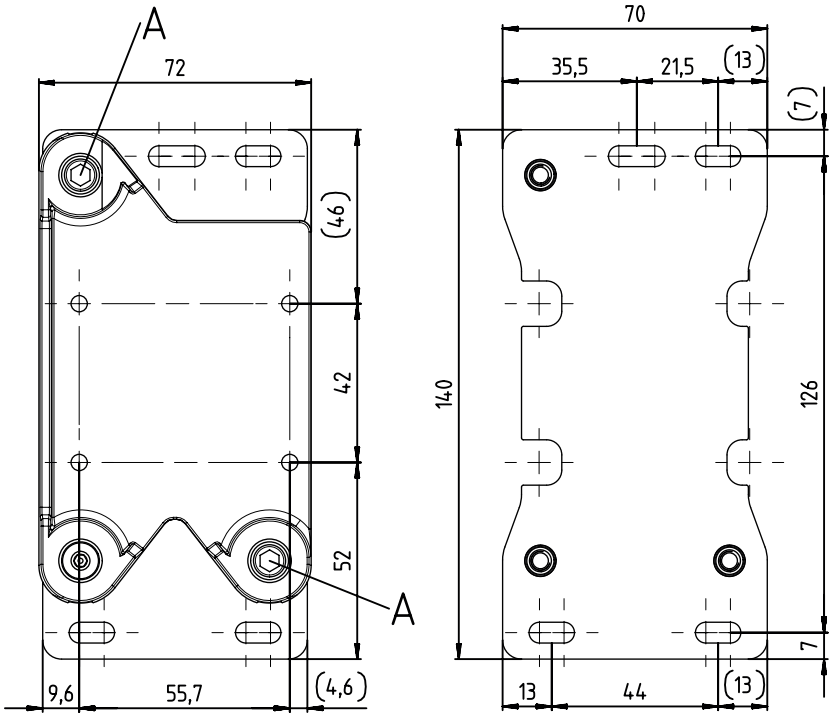

All dimensions in mm

A Adjustment screws with hexagon socket WAF4

Fig. 12.3: Alignment unit BTA 0100M (aluminum/steel) or BTA 0100 M.5 (stainless steel)

Adapter plate BT 0100M

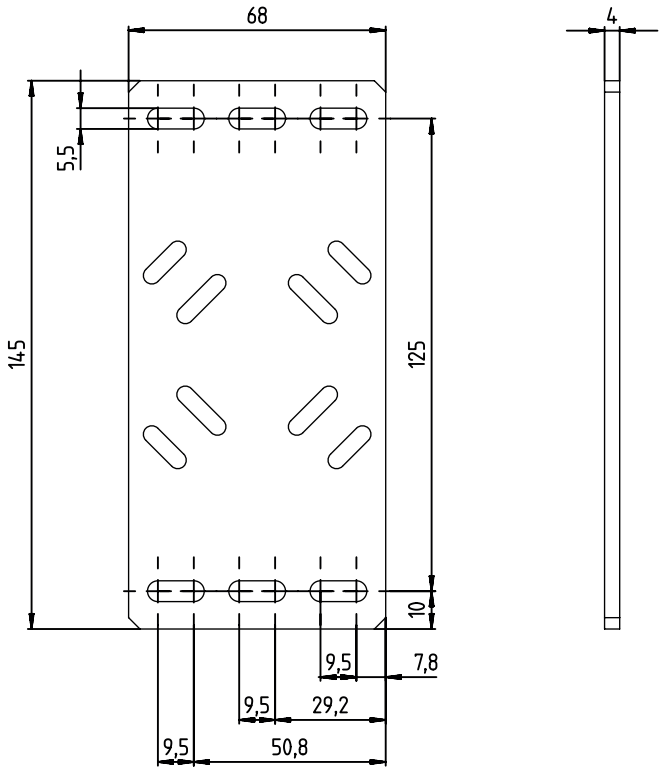

All dimensions in mm

Fig. 12.4: Mounting device BT 0100M for mounting without an alignment unit

Floor holder BT 0100M-F

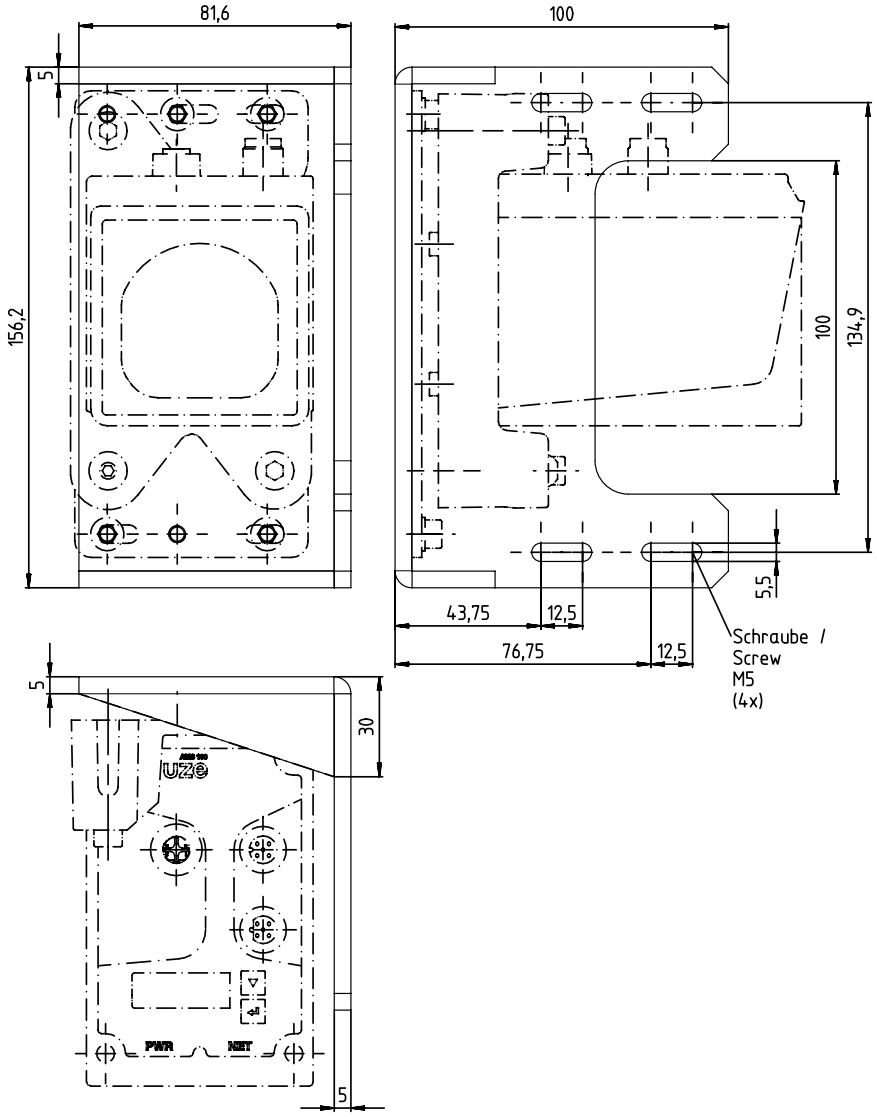

All dimensions in mm

Fig. 12.5: Mounting device BT 0100M-F for floor mounting or horizontal surfaces

Deflector unit US AMS 02

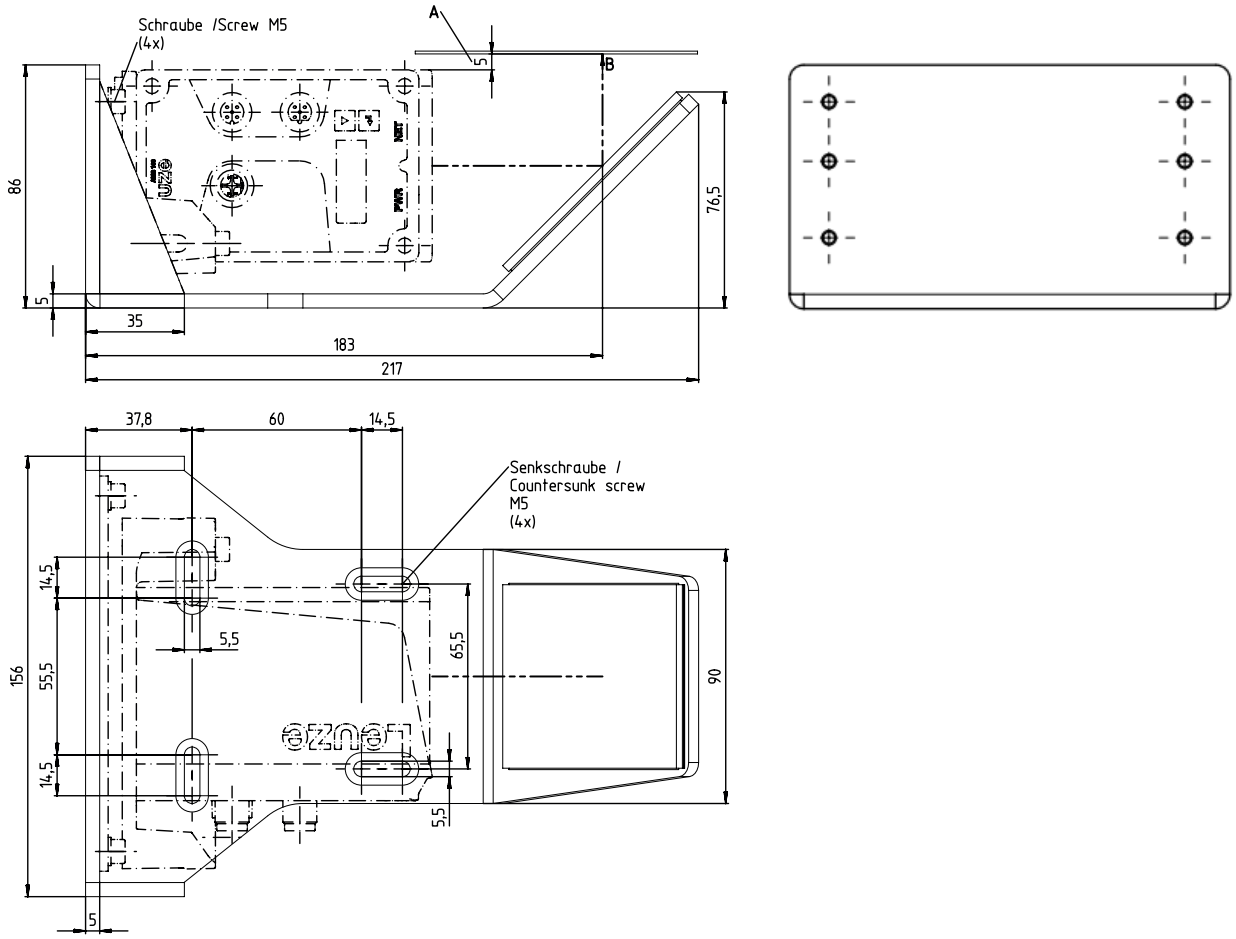

All dimensions in mm

A Minimum distance from the reflector

B Optical axis

Fig. 12.6: Deflecting mirror US AMS 02 – For use with AMS 1xxi … BTA

Deflector unit US 1 OMS

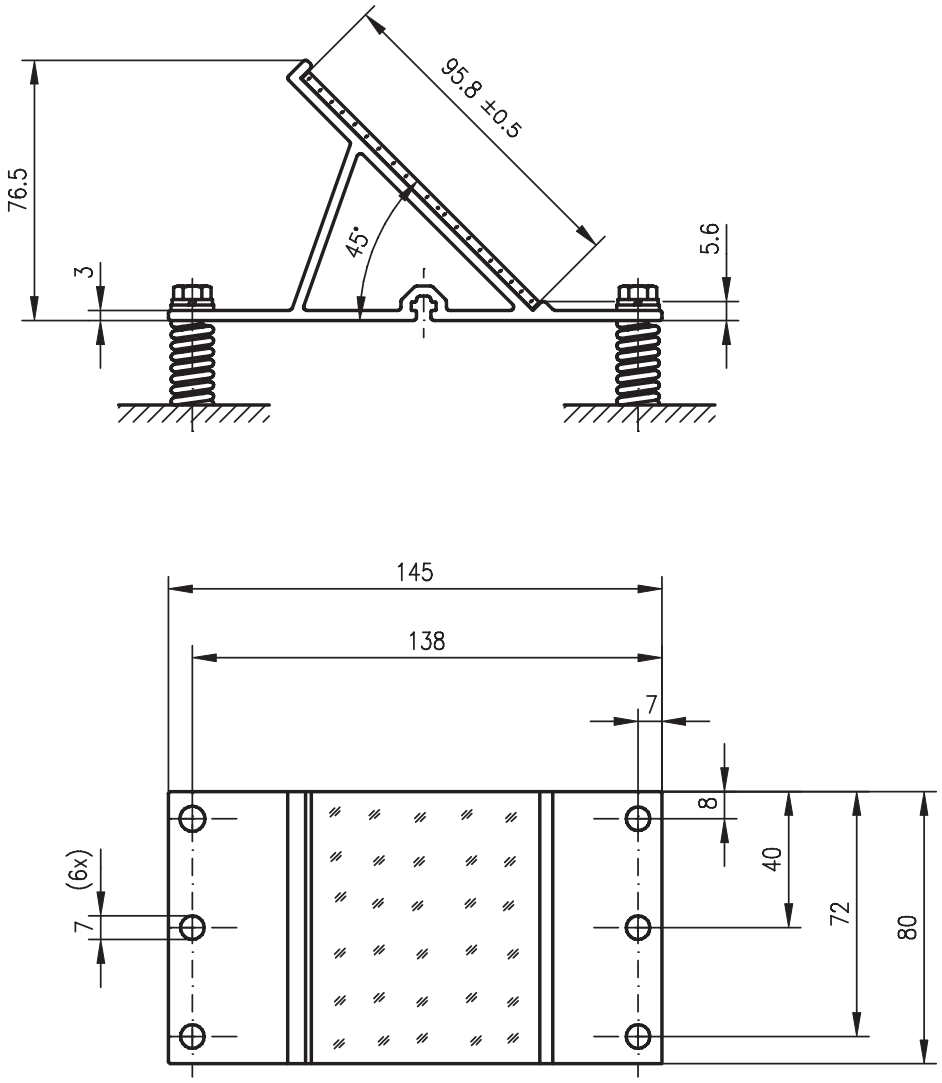

All dimensions in mm

Fig. 12.7: Deflecting mirror US 1 OMS without mounting bracket for simple 90° deflection of laser beam

Reflector

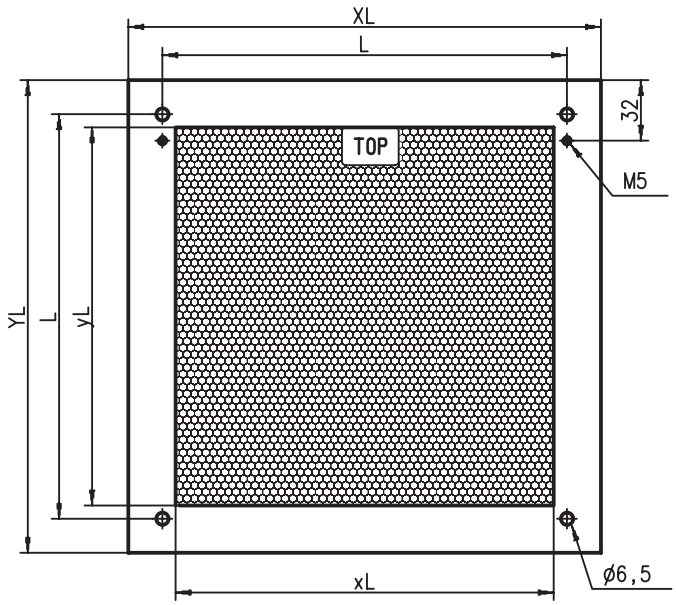

All dimensions in mm

Fig. 12.8: Reflective tape …-M on carrier plate

Tab. 12.11: Dimensions of reflective tape on carrier plate

Article	Reflective tape [mm]		Reflector plate [mm]		
	xL	yL	XL	YL	L
Reflective tape 200x200-M	200	200	250	250	214
Reflective tape 500x500-M	500	500	550	550	514
Reflective tape 914x914-M	914	914	964	964	928

Heated reflector

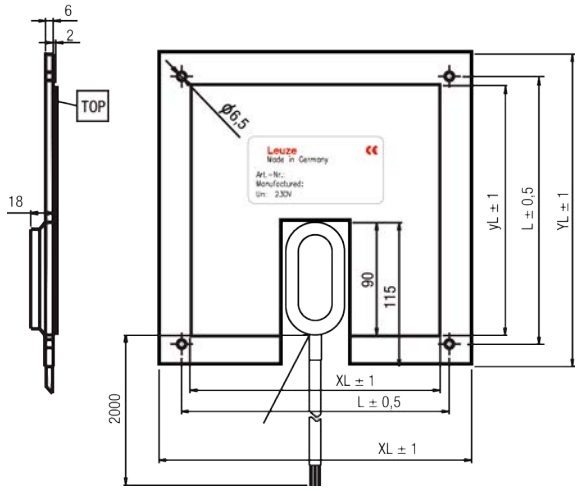

All dimensions in mm

Fig. 12.9: Reflective tape …-H

Tab. 12.12: Dimensions of heated reflectors

Article	Reflective tape [mm]		Insulated carrier plate [mm]		
	xL	yL	XL	YL	L
Reflective tape 200x200-H	200	200	250	250	214
Reflective tape 500x500-H	500	500	550	550	514
Reflective tape 914x914-H	914	914	964	964	928

13 Order guide and accessories

13.1 Part number code

AMS 1xxi yyy zzz

AMS	Optical laser measurement system (absolute measurement system)
1	Series: AMS 100i
xx	Interface: 07: SSI 08: Ethernet TCP/IP 38: EtherCAT 48: PROFINET 58: EtherNet/IP
i	i: Integrated fieldbus technology
yyy	Operating range: 40: max. operating range in m 120: max. operating range in m 200: max. operating range in m
zzz	Mounting accessories: see chapter 13.3 "Accessories – Mounting"

NOTICE

A list with all available device types can be found on the Leuze website **www.leuze.com**.

13.2 AMS 108i type overview

Tab. 13.1: AMS 108i

Type designation	Description	Part no.
AMS 108i 40	40 m operating range, Ethernet interface	50151445
AMS 108i 120	120 m operating range, Ethernet interface	50151444
AMS 108i 200	200 m operating range, Ethernet interface	50155734
AMS 108i 40 BTA	40 m operating range, Ethernet interface, pre-mounted alignment unit	50151441
AMS 108i 120 BTA	120 m operating range, Ethernet interface, pre-mounted alignment unit	50151438
AMS 108i 200 BTA	200 m operating range, Ethernet interface, pre-mounted alignment unit	50155733
AMS 108i 40 H	40 m operating range, Ethernet interface, integrated heating	50151447
AMS 108i 120 H	120 m operating range, Ethernet interface, integrated heating	50151446
AMS 108i 200 H	200 m operating range, Ethernet interface, integrated heating	50155735
AMS 108i 40 BTA H	40 m operating range, Ethernet interface, pre-mounted alignment unit, integrated heating	50151443

Type designation	Description	Part no.
AMS 108i 120 BTA H	120 m operating range, Ethernet interface, pre-mounted alignment unit, integrated heating	50151442
AMS 108i 200 BTA H	200 m operating range, Ethernet interface, pre-mounted alignment unit, integrated heating	50155736

13.3 Accessories – Mounting

Tab. 13.2: Mounting

Type designation	Description	Part no.
US AMS 02	Deflecting mirror for 90° deflection of the laser beam, for use with AMS 1xxi … BTA	50144969
US 1 OMS	Deflector unit without mounting bracket for simple 90° deflection of laser beam	50035630
BTA 0100 M	Alignment unit	50144385
BTA 0100 M.5	Stainless steel alignment unit	50151594
BT 0100 M	Adapter plate for mounting without alignment unit	50144968
BT 0100M-F	Mounting plate for floor assembly and/or horizontal surfaces	50144970

13.4 Accessories – Reflective tapes

Tab. 13.3: Overview of reflective tape types

Type designation	Description	Part no.
REF 4-A-150x150	Self-adhesive reflective tape, 150 x 150 mm	50141015
Reflective tape 200x200-S	Self-adhesive reflective tape, 200 x 200 mm	50104361
REF 4-A-300x300	Self-adhesive reflective tape, 300 x 300 mm	50141014
Reflective tape 500x500-S	Self-adhesive reflective tape, 500 x 500 mm	50104362
Reflective tape 749x914 – S	Self-adhesive reflective tape, 749 x 914 mm	50104363
Reflective tape 914x914-S	Self-adhesive reflective tape, 914 x 914 mm	50108988
Reflective tape 200x200-M	Reflective tape on carrier plate, 200 x 200 mm	50104364
Reflective tape 500x500-M	Reflective tape on carrier plate, 500 x 500 mm	50104365
Reflective tape 914x914-M	Reflective tape on carrier plate, 914 x 914 mm	50104366
Reflective tape 200x200-H	Reflective tape on heated carrier plate, 200 x 200 mm	50115020
Reflective tape 500x500-H	Reflective tape on heated carrier plate, 500 x 500 mm	50115021
Reflective tape 914x914-H	Reflective tape on heated carrier plate, 914 x 914 mm	50115022

13.5 Accessories – connection technology

Tab. 13.4: Connection cables

Type designation	Description	Part no.
KS ET-M12-4A-P7-020	Connection cable, length 2 m, shielded	50135073
KS ET-M12-4A-P7-050	Connection cable, length 5 m, shielded	50135074
KD U-M12-5A-V1-020	Connection cable, length 2 m, unshielded	50132077
KD U-M12-5A-V1-050	Connection cable, length 5 m, unshielded	50132079

14 EC Declaration of Conformity

The optical laser measurement systems of the AMS 100i series have been developed and manufactured in accordance with the applicable European standards and directives.

	NOTICE
	You can download the EC Declaration of Conformity from the Leuze website. ↳ Call up the Leuze website: *www.leuze.com*. ↳ Enter the type designation or part number of the device as the search term. The article number can be found on the name plate of the device under the entry “Part. No.”. ↳ The documents can be found on the product page for the device under the *Downloads* tab.

15 Licenses

The service interface can be accessed via a web browser using the IP address 192.168.60.101, either through the webConfig tool or after connecting an Ethernet cable.

↳ To do this, go to Settings and open the *Licenses*tab.

The license texts for the software packages can then be selected via the drop-down menu.

We can provide you with the source code of these software components on a data carrier/by download if you submit a request to our customer support within three years of distribution of the product at the following address:

Service center

Leuze electronic GmbH + Co. KG

In der Braike 1

D-73277 Owen / Germany

AMS 100i source code