Technical data sheet
Safety light curtain receiver
Part no.: 72101003
ELC150R14-300



For Illustration purposes only

Contents

- Technical data
- Dimensioned drawings
- Electrical connection
- Circuit diagrams
- Suitable transmitters
- Part number code
- Notes
- Accessories

Technical data

Leuze

Basic data

Series	ELC150
Device type	Receiver
Contains	2x sliding block
Application	Finger protection

Functions

Functions	Automatic start/restart

Characteristic parameters

Type	4, IEC/EN IEC 61496
SIL	3, IEC 61508
SILCL	3, IEC/EN 62061
Performance Level (PL)	e, EN ISO 13849-1
PFH_D	8E-09 per hour
Mission time T_M	20 years, EN ISO 13849-1
Category	4, EN ISO 13849

Protective field data

Resolution	14 mm
Protective field height	300 mm

Optical data

Synchronization	Optical between transmitter and receiver

Electrical data

Protective circuit	Overvoltage protection
	Short circuit protected

Performance data

Supply voltage U_B	24 V, DC, -20 ... 20 %
Current consumption, max.	100 mA

Outputs

Number of safety-related switching outputs (OSSDs)	2 Piece(s)

Safety-related switching outputs

Type	Safety-related switching output OSSD
Switching voltage high, min.	18 V
Switching voltage low, max.	2.5 V
Switching voltage, type.	22.5 V
Voltage type	DC
Current load, max.	50 mA
Load inductivity	500,000 µH
Load capacity	0.03 µF
Residual current, max.	0.5 mA
Voltage drop	1.5 V

Safety-related switching output 1

Assignment	Connection 1, pin 2
Switching element	Transistor, PNP

Safety-related switching output 2

Assignment	Connection 1, pin 4
Switching element	Transistor, PNP

Time behavior

Response time	5.4 ms
Restart delay time	100 ms

Connection

Number of connections	1 Piece(s)

Connection 1

Function	Machine interface
Type of connection	Cable with connector
Cable length	300 mm
Sheathing material	PUR
Number of conductors	4 -wire
Thread size	M12
Material	Metal
No. of pins	4 -pin

Cable properties

Permissible conductor cross section, type.	0.25 mm²
Length of connection cable, max.	25 m
Permissible cable resistance to load, max.	20 Ω

Mechanical data

Dimension (W x H x L)	34.7 mm x 315 mm x 39.3 mm
Housing material	Metal
Metal housing	Aluminum
Lens cover material	Plastic / PMMA
Material of end caps	Diecast zinc
Net weight	530 g
Housing color	Yellow, RAL 1021
Type of fastening	Groove mounting
	Mounting brackets

Operation and display

Type of display	LED
Number of LEDs	6 Piece(s)

Environmental data

Ambient temperature, operation	0 ... 50 °C
Ambient temperature, storage	-30 ... 70 °C
Relative humidity (non-condensing)	0 ... 95 %

Certifications

Degree of protection	IP 65
Protection class	III
Approvals	c UL US
	KCs
	TÜV Süd
Vibration resistance	50 m/s²
US patents	US 6,418,546 B

Technical data

Customs tariff number	85365019
ECLASS 5.1.4	27272704
ECLASS 8.0	27272704
ECLASS 9.0	27272704
ECLASS 10.0	27272704
ECLASS 11.0	27272704
ECLASS 12.0	27272704
ECLASS 13.0	27272704
ECLASS 14.0	27272704
ECLASS 15.0	27272704
ECLASS 16.0	27272704
ETIM 5.0	EC002549
ETIM 6.0	EC002549
ETIM 7.0	EC002549
ETIM 8.0	EC002549
ETIM 9.0	EC002549
ETIM 10.0	EC002549
UNSPSC 26.08	46171620

Dimensioned drawings

All dimensions in millimeters

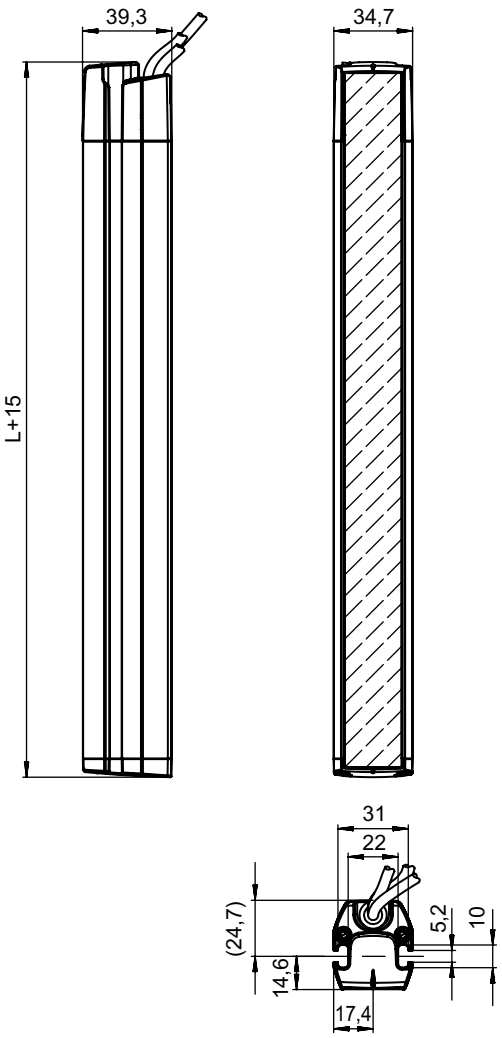

L Protective field length

Electrical connection

Connection 1

Function	Machine interface
Type of connection	Cable with connector
Cable length	300 mm
Sheathing material	PUR
Cable color	Black
Number of conductors	4 -wire
Wire cross section	0.2 mm²
Thread size	M12
Type	Male
Material	Metal
No. of pins	4 -pin
Encoding	A-coded

Electrical connection

Pin	Pin assignment	Conductor color
1	+24 V	Brown
2	OSSD1	White
3	0 V	Blue
4	OSSD2	Black

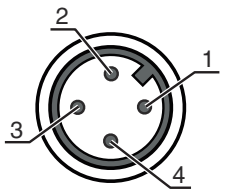

Circuit diagrams

Connection diagram receiver

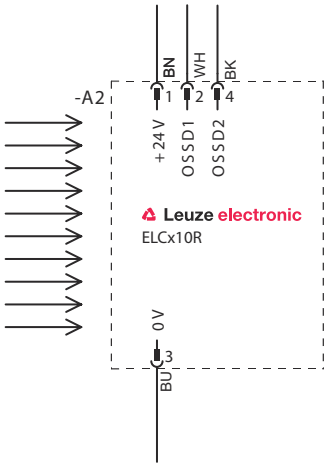

Circuit diagram example with downstream MSI-SR4B safety relay

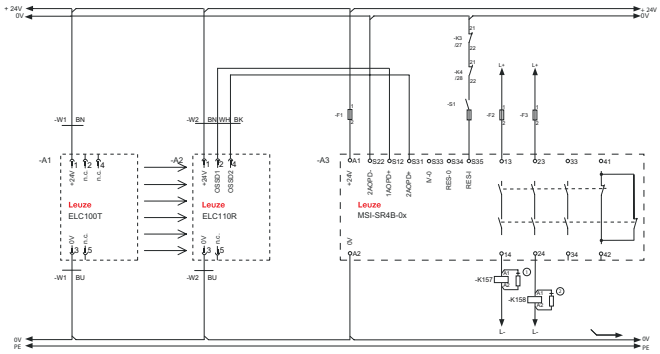

1.2 Spark extinction circuit, suitable spark extinction provided

Suitable transmitters

	Part no.	Designation	Article	Description
	72100003	ELC105T14-300	Safety light curtain transmitter	Resolution: 14 mm Protective field height: 300 mm Operating range: 0.5 ... 3 m Connection: Cable with connector, M12, Metal, 4 -pin, 300 mm, PUR

Part number code

Part designation: **ELC1yyzaa-hhhh**

ELC	Safety light curtain
1	**Series** 1: ELC150
yy	**Function classes** 00: transmitter 50: Receiver – automatic restart
z	**Device type** T: transmitter R: receiver
a	**Resolution** 14: 14 mm 17: 17 mm 30F: 30 mm
hhhh	**Protective field height** 300 … 1500: from 300 mm to 1500 mm

Note

- A list with all available device types can be found on the Leuze website at www.leuze.com.

Notes

Observe intended use!

- The product may only be put into operation by competent persons.
- Only use the product in accordance with its intended use.

Accessories

Connection technology - Connection cables

	Part no.	Designation	Article	Description
	50133860	KD S-M12-5A-P1-050	Connection cable	Application: Oil and lubricant resistant Connection 1: Connector, M12, Axial, Female, A-coded, 5 -pin Connector, LED: No Connection 2: Open end Shielded: Yes Cable length: 5,000 mm Sheathing material: PUR

Mounting technology - Other

	Part no.	Designation	Article	Description
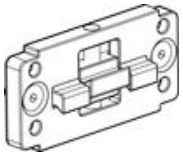	424439	BT-2P45	Mounting bracket	Contains: 2x BT-P45 Bore hole 1: M6 Bore hole 2: M6 Design of mounting device: Mounting clamp Fastening, at system: Groove mounting Mounting bracket, at device: Groove mounting Type of mounting device: Clampable, Suitable for mounting in UDC-S2, DC-S2 device columns Material: Metal

Accessories

Services

	Part no.	Designation	Article	Description
	S981050	CS40-I-140	Safety inspection	Details: Checking of a safety light barrier application in accordance with current standards and guidelines. Inclusion of the device and machine data in a database, production of a test log per application. Conditions: It must be possible to stop the machine, support provided by customer's employees and access to the machine for Leuze employees must be ensured.
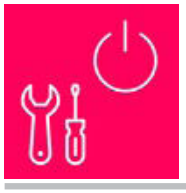	S981046	CS40-S-140	Start-up support	Details: For safety devices including stopping time measurement and initial inspection. Conditions: Devices and connection cables are already mounted, price not including travel costs and, if applicable, accommodation expenses.

Note



A list with all available accessories can be found on the Leuze website in the Download tab of the article detailed page.