Technical data sheet
Safety light curtain transmitter
Part no.: 68008333
MLC502T30-300/V



For Illustration purposes only

Contents

- Technical data
- Dimensioned drawings
- Electrical connection
- Circuit diagrams
- Operation and display
- Suitable receivers
- Part number code
- Notes
- Accessories

Technical data

Basic data

Series	MLC 500
Device type	Transmitter
Contains	2x BT-NC sliding block
Application	Hand protection

Functions

Functions	Range reduction
	Test signal input
	Transmission channel changeover

Characteristic parameters

Type	4, IEC/EN IEC 61496
SIL	3, IEC 61508
SIL	3, IEC/EN IEC 62061
Mission time T_M	20 years, EN ISO 13849-1

Protective field data

Resolution	30 mm
Protective field height	300 mm
Operating range	0 ... 10 m

Optical data

Synchronization	Optical between transmitter and receiver
Light source	LED, Infrared
Wavelength	940 nm
Transmitted-signal shape	Pulsed
LED risk group	Exempt group (in acc. with EN 62471:2008)

Electrical data

Protective circuit	Overvoltage protection
	Short circuit protected

Performance data

Supply voltage U_B	24 V, DC, -20 ... 20 %
Current consumption, max.	50 mA
Fuse	2 A semi time-lag

Inputs

Number of digital switching inputs	1 Piece(s)

Switching inputs

Type	Digital switching input
Switching voltage high, min.	18 V
Switching voltage low, max.	2.5 V
Switching voltage, type.	22.5 V
Voltage type	DC

Connection

Number of connections	1 Piece(s)

Connection 1

Function	Machine interface
Type of connection	Connector
Thread size	M12
Material	Metal
No. of pins	5 -pin

Cable properties

Permissible conductor cross section, type.	0.25 mm²
Length of connection cable, max.	100 m
Permissible cable resistance to load, max.	200 Ω

Mechanical data

Dimension (W x H x L)	29 mm x 366 mm x 35.4 mm
Housing material	Metal
Metal housing	Aluminum
Lens cover material	Plastic / PMMA
Material of end caps	Diecast zinc
Net weight	450 g
Housing color	Yellow, RAL 1021
Type of fastening	Groove mounting
	Mounting brackets
	Mounting on Device Column
	Swivel mount

Operation and display

Type of display	LED
Number of LEDs	2 Piece(s)

Environmental data

Ambient temperature, operation	-30 ... 55 °C
Ambient temperature, storage	-30 ... 70 °C
Relative humidity (non-condensing)	0 ... 95 %

Certifications

Degree of protection	IP 65
Protection class	III
Approvals	c TÜV NRTL US
	c UL US
	TÜV Süd
Vibration resistance	200 m/s²
Shock resistance	400 m/s²
US patents	US 6,418,546 B

Classification

Customs tariff number	85365019
ECLASS 5.1.4	27272704
ECLASS 8.0	27272704
ECLASS 9.0	27272704
ECLASS 10.0	27272704
ECLASS 11.0	27272704
ECLASS 12.0	27272704
ECLASS 13.0	27272704
ECLASS 14.0	27272704
ECLASS 15.0	27272704
ECLASS 16.0	27272704
ETIM 5.0	EC002549
ETIM 6.0	EC002549
ETIM 7.0	EC002549
ETIM 8.0	EC002549
ETIM 9.0	EC002549
ETIM 10.0	EC002549
UNSPSC 26.08	46171620

Dimensioned drawings

All dimensions in millimeters

Calculation of the effective protective field height $H_{PFE} = H_{PFN} + B + C$

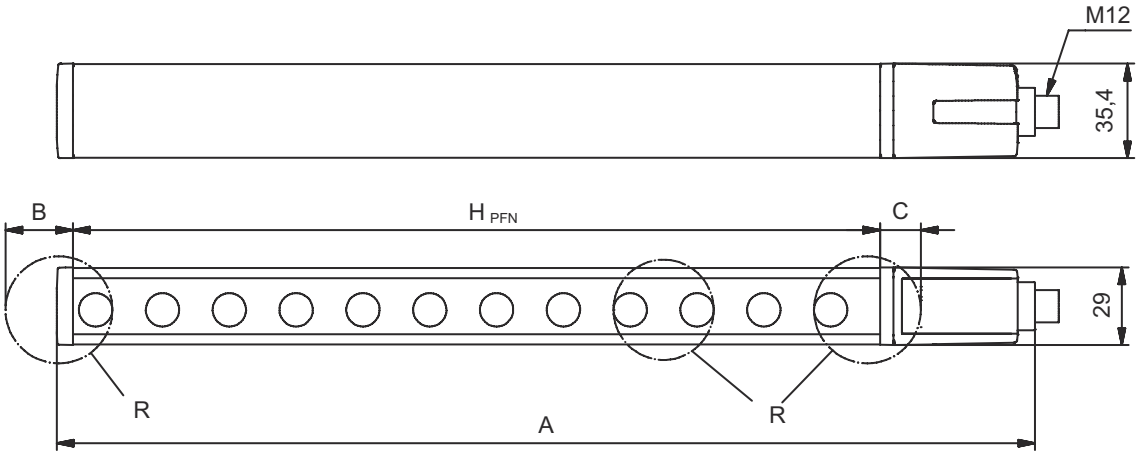

H_{PFE}	Effective protective field height = 328 mm	C	9 mm
H_{PFN}	Nominal protective field height = 300 mm	R	Effective protective field height H_{PFE} goes beyond the dimensions of the optics area to the outer borders of the circles labeled with R.
A	Total height = 366 mm		
B	19 mm		

Electrical connection

Connection 1

Function	Machine interface
Type of connection	Connector
Thread size	M12
Type	Male
Material	Metal
No. of pins	5 -pin
Encoding	A-coded
Connector housing	FE/SHIELD

Pin	Pin assignment	Conductor color
1	VIN1	Brown
2	n.c.	White
3	VIN2	Blue
4	Test in	Black
5	FE/SHIELD	Gray

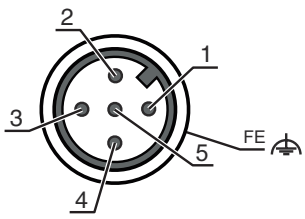

Circuit diagrams

Transmission channel C1, OSSDs deactivated on the receiver

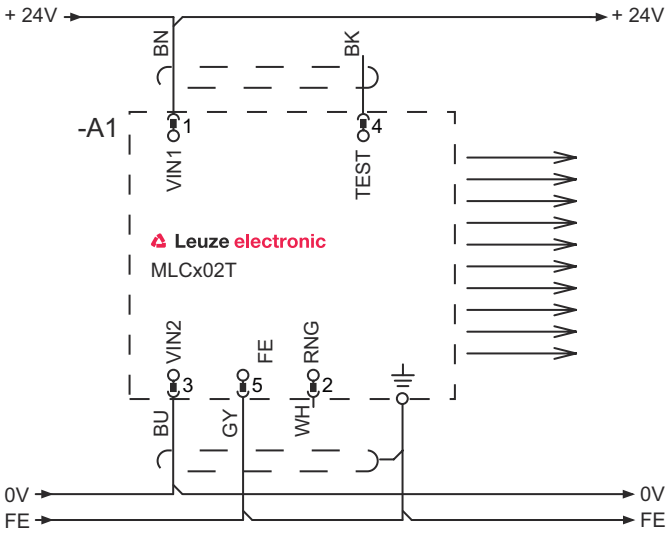

1 VIN1 = +24 V
2 RNG = 0 V or open
3 VIN2 = 0 V
4 TEST= 0 V or 24V

Transmission channel C1, OSSDs activated on the receiver

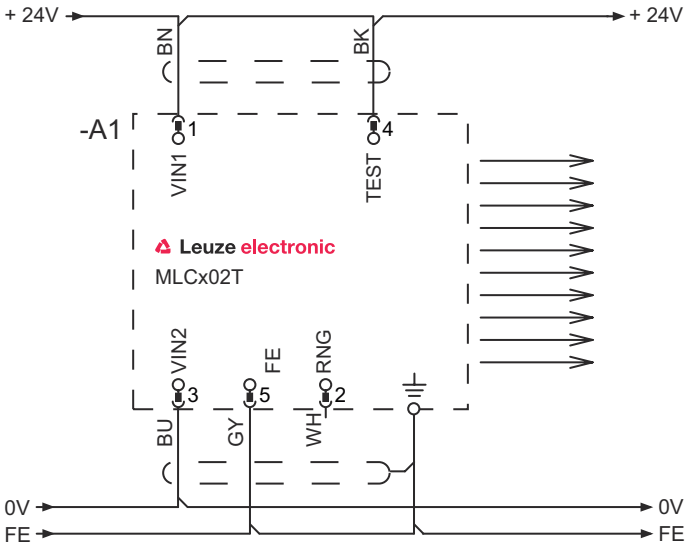

1 VIN1 = +24 V
2 RNG = +24 V
3 VIN2 = 0 V
4 TEST= 0 V or 24V

Circuit diagrams

Transmission channel C2, OSSDs deactivated on the receiver

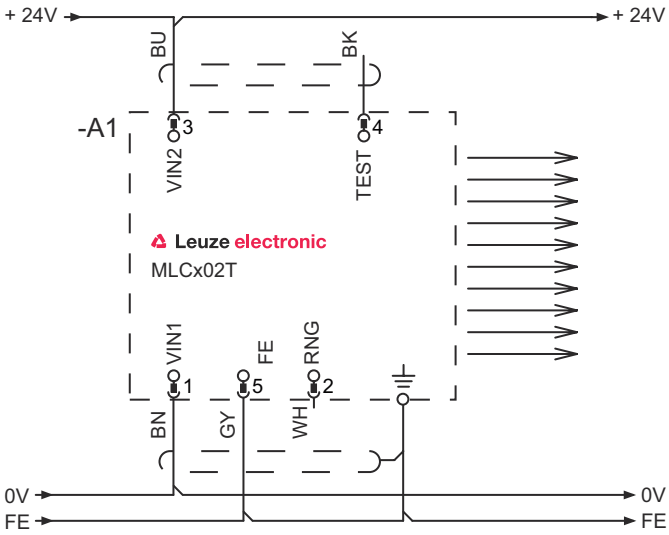

1 VIN1 = 0 V
2 RNG = 0 V or open
3 VIN2 = +24 V
4 TEST= 0 V or 24V

Transmission channel C2, OSSDs activated on the receiver

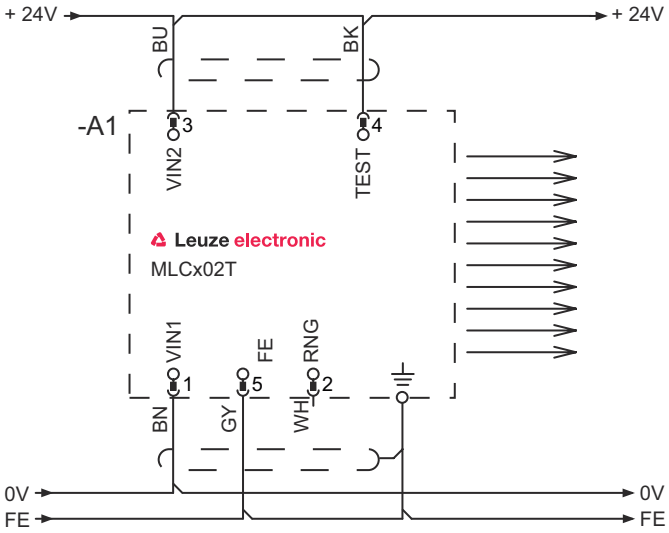

1 VIN1 = 0 V
2 RNG = +24 V
3 VIN2 = +24 V
4 TEST= 0 V or 24V

Operation and display

LED	Display	Meaning
1	Off	Device switched off
	Red, continuous light	Device error
	Green, continuous light	Normal operation
2	Green, flashing, 10 s long after switching on	Test input activated
	Off	Transmission channel C1
	Green, continuous light	Transmission channel C2

Suitable receivers

	Part no.	Designation	Article	Description
	68001333	MLC510R30-300/V	Safety light curtain receiver	Function package: Basic Resolution: 30 mm Protective field height: 300 mm Response time: 4 ms Connection: Connector, M12, Metal, 5 -pin

Part number code

Part designation: **MLCxyy-za-hhhhei-ooo**

MLC	Safety light curtain
x	**Series** 3: MLC 300 5: MLC 500
yy	**Function classes** 00: transmitter 01: transmitter (AIDA) 02: transmitter with test input 10: basic receiver - automatic restart 11: basic receiver - automatic restart (AIDA) 20: standard receiver - EDM/RES selectable 30: Extended receiver blanking/muting or gating 35: Extended receiver – Gating
z	**Device type** T: transmitter R: receiver
a	**Resolution** 14: 14 mm 20: 20 mm 30F: 30 mm 40: 40 mm 90: 90 mm
hhhh	**Protective field height** 150 … 3000: from 150 mm to 3000 mm
e	**Host/Guest (optional)** H: Host MG: Middle Guest G: Guest
i	**Interface (optional)** /A: AS-i
ooo	**Option** /V: high Vibration-proof EX2: explosion protection (zones 2 + 22) SPG: Smart Process Gating SPG RR: Smart Process Gating – Reduced resolution

Note

- A list with all available device types can be found on the Leuze website at www.leuze.com.

Notes

Observe intended use!

- The product may only be put into operation by competent persons.
- Only use the product in accordance with its intended use.

Accessories

Connection technology - Connection cables

	Part no.	Designation	Article	Description
	50133860	KD S-M12-5A-P1-050	Connection cable	Application: Oil and lubricant resistant Connection 1: Connector, M12, Axial, Female, A-coded, 5 -pin Connector, LED: No Connection 2: Open end Shielded: Yes Cable length: 5,000 mm Sheathing material: PUR

Mounting technology - Swivel mounts

	Part no.	Designation	Article	Description
	429393	BT-2HF	Mounting bracket set	Contains: 2x BT-HF swivel mount, 1 cylinder for mounting on the light curtain Fastening, at system: Through-hole mounting Mounting bracket, at device: Clampable Type of mounting device: Turning, 360° Material: Metal, Plastic

Alignment aids

	Part no.	Designation	Article	Description
	520101	AC-ALM-M	Alignment aid	Housing material: Plastic

Services

	Part no.	Designation	Article	Description
	S981050	CS40-I-140	Safety inspection	Details: Checking of a safety light barrier application in accordance with current standards and guidelines. Inclusion of the device and machine data in a database, production of a test log per application. Conditions: It must be possible to stop the machine, support provided by customer's employees and access to the machine for Leuze employees must be ensured.
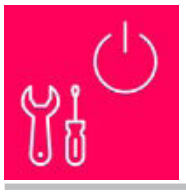	S981046	CS40-S-140	Start-up support	Details: For safety devices including stopping time measurement and initial inspection. Conditions: Devices and connection cables are already mounted, price not including travel costs and, if applicable, accommodation expenses.

Note



↳ A list with all available accessories can be found on the Leuze website in the Download tab of the article detailed page.