Technical data sheet
Attachment lens
Part no.: 50117782
KL-SM02



For Illustration purposes only

Contents

- Technical data
- Dimensioned drawings
- Accessories

Technical data

Basic data

Contains	2x

Functions

Functions	90° - deflection

Mechanical data

Net weight	5 g
Type of fastening	Screw type

Classification

Customs tariff number	90022000
ECLASS 5.1.4	27279205
ECLASS 8.0	27279205
ECLASS 9.0	27273602
ECLASS 10.0	27273603
ECLASS 11.0	27273603
ECLASS 12.0	27273603
ECLASS 13.0	27273603
ECLASS 14.0	27273603
ECLASS 15.0	27273603
ECLASS 16.0	27273603
ETIM 5.0	EC002498
ETIM 6.0	EC003015
ETIM 7.0	EC003015
ETIM 8.0	EC003015
ETIM 9.0	EC003015
ETIM 10.0	EC003015
UNSPSC 26.08	31241501

Dimensioned drawings

All dimensions in millimeters

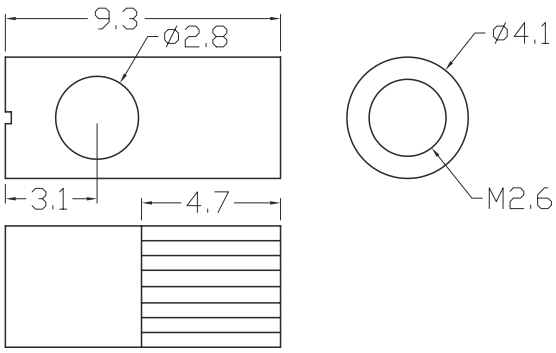



Accessories

General

	Part no.	Designation	Article	Description
	50117750	KF-LY-77TZ-20	Plastic fiber optics for throughbeam operation	Area of application: General applications Light beam exit: Lateral Fiber core: Single fiber core Outer diameter: 2.2 mm Fiber length: 2,000 mm Fiber sheathing material: PE Laying: Flexible
	50117766	KFX-L-420	Plastic fiber optics for throughbeam operation	Area of application: General applications Light beam exit: Front Fiber core: Single fiber core Outer diameter: 2.2 mm Fiber length: 2,000 mm Fiber sheathing material: PE Laying: standard
	50117767	KFX-LD-420	Plastic fiber optics for throughbeam operation	Area of application: Precise object detection Light beam exit: Front Fiber core: Single fiber core Outer diameter: 1.25 mm Fiber length: 2,000 mm Fiber sheathing material: PE Laying: standard
	50117768	KFX-LH-420	Plastic fiber optics for throughbeam operation	Area of application: General applications Special version: Heat resistant Light beam exit: Front Fiber core: Single fiber core Outer diameter: 2.2 mm Fiber length: 2,000 mm Fiber sheathing material: PE Laying: standard
	50117769	KFX-LY-420	Plastic fiber optics for throughbeam operation	Area of application: General applications Light beam exit: Front Fiber core: Single fiber core Outer diameter: 2.2 mm Fiber length: 2,000 mm Fiber sheathing material: PE Laying: Flexible

Note

A list with all available accessories can be found on the Leuze website in the Download tab of the article detailed page.